

เอกสารแนบ 26

Emergency Preparedness and Response Procedure for Construction

PTTLNG Nong Fab LNG Receiving Terminal Project

Emergency Preparedness and Response Plan for Construction

Doc. Class Z

REV.	STATUS	DATE	REVISION DESCRIPTION	BY	CHK.	APPR.

This document is the property of SPCC who will safeguard its rights according to the civil and penal provisions of the Law.

Revision list:

Rev. Nr	Modifications:
R1	First Issue
F1	Issue for final and improvement from contractor on chapters: 3, 7,

TABLE OF CONTENTS

1 INTRODUCTION 3

2 DEFINITIONS AND ABBREVIATIONS 4

3 EMERGENCY CASES 6

4 REFERENCE DOCUMENTS 7

5 RESPONSIBILITIES 8

6 SITE EMERGENCY TEAM 11

7 ERP FOR CONSTRUCTION 12

8 EMERGENCY CONTACT NUMBERS 25

9 ASSEMBLY POINTS FOR THE SITE PREPARATION (AS REFERENCE) 33

10 EMERGENCY DRILL FORM 34

11 EMERGENCY DRILL PLAN 35

This document is the property of SPCC who will safeguard its rights according to the civil and penal provisions of the Law.

1 INTRODUCTION

The purpose of this document is to ensure that all foreseeable emergency situations arising during construction.

This Emergency Response Plan covers:

- Nomination of persons responsible for managing an emergency situation;
- Definition of roles/responsibilities of emergency response team;
- Procedures for reporting, communicating and response action in an emergency;
- Monitoring, testing and maintenance of alarm systems and early warning devices;
- Training requirement including drill exercises for emergencies;
- Rescues and medical treatment of casualties.

It is the responsibility of the CONTRACTOR Project Manager for Construction to ensure that all personnel, including visitors, are made fully aware of the contents of the emergency response procedures and receive information and induction training as necessary. The information and the training shall be documented.

This Emergency Response Plan describes the initial response actions, resource mobilization, training in emergency response and testing in respect of incidents which could occur during construction and it will be periodically updated based on the new information and needs of the phase.

This document is the property of SPCC who will safeguard its rights according to the civil and penal provisions of the Law.

1.1 SCOPE OF THE DOCUMENT

Scope of this document is to set up an emergency response and communications system that shall apply to any emergency occurring during the construction phase.

2 DEFINITIONS AND ABBREVIATIONS

2.1 SPECIFIC FOR THIS DOCUMENT:

Emergency	Event that causes a deviation from normal operating conditions, and such as to result in harm or potential harm to the health and safety of people, the environment and the Company's or third parties' assets. Emergency may result from human behaviours (terroristic attack, civil war, riots, demonstrations, etc.), malfunctions or failure of machine or plant, technical event (ignition, explosion, short circuit, etc.) or natural events (earthquake, hurricane, etc.).
1st level Emergency	A minor emergency that can be effectively addressed locally using personnel and equipment available on site and/or to the Operating Company. This includes, but is not limited to, the following: minor injuries to contractor or subcontractor personnel; damage to plant and/or equipment without significant harm to personnel, the environment, and/or public health; minor fire; manifestation
2nd level Emergency	An emergency that can be addressed locally with the support of personnel and equipment made available by authorities and public administrations at peripheral level. This includes, but is not limited to, the following: fire with intervention of the fire-brigade; medical evacuation (MEDEVAC); local demonstration.
3rd level Emergency	An emergency which cannot be addressed locally and impacts the Site's and/or the Operating Company's

This document is the property of SPCC who will safeguard its rights according to the civil and penal provisions of the Law.

	operations, requiring assistance/support from the relevant Corporate functions and/or authorities and public administrations at central level. This includes, but is not limited to, the following: serious social unrest that cause the repatriation; serious injuries to contractor or subcontractor personnel requiring MEDEVAC; contractor asset stoppage.
Crisis	A very serious event whose effects cause or may cause major impacts on the activities, health and safety of the employees and to the environment. A crisis is an emergency that cannot be addressed locally but requires the involvement of Saipem Crisis Management Team for the operational coordination of internal and external personnel and equipment available locally or provided by the relevant Corporate functions or by other group Companies. An event whose resolution can be extended over time.
Emergency Response Team	Group of qualified personnel responsible for managing emergencies (fire, medical or rescue)
Incident	An accidental event or chain of events that causes an emergency within the project context.
Medical Evacuation	Evacuation plan for medical emergencies.

2.2 ABBREVIATIONS

CM	Construction Manager
ECC	Emergency Control Center
EMM	Emergency Management Manager
ERP	Emergency Response Plan
ERT	Emergency Response Team
GS	General Service
IC	Incident Controller
MEDEVAC	Medical Evacuation
MERP	Medical Emergency Response Plan

This document is the property of SPCC who will safeguard its rights according to the civil and penal provisions of the Law.

PIP	Pre- Incident Plan
SM	Site Manager
SET	Site Emergency Team

3 EMERGENCY CASES

Emergencies, based on the nature of the triggering event, are classified in three main categories :

1. Operative: emergency due to carrying out of the site activities;
2. Natural: emergency due to event not related to the site activities and that cause and could cause harm to asset, health and safety of the personnel, environment or PTTLNG and CONTRACTOR reputation;
3. Security: emergency due to event not related to the site and that cause and could cause harm to asset, health and safety of the personnel, environment or CONTRACTOR reputation.

Events that may generate an emergency or crisis (Emergency Scenarios) are not all in the scope of the management of the present documents, however CONTRACTOR have identified such scenarios in as below reported:

- First aid
- Fire;
- Road accident;
- Man in the sea;

All the above events that may generate an emergency have to be considered in the following potential working conditions:
Project execution phase;
The identified scenarios may produce an emergency of different level.

The most probable foreseen Emergency level is highlighted in the table by suing the following classification and colors.

This document is the property of SPCC who will safeguard its rights according to the civil and penal provisions of the Law.

Level 1
Level 2
Level 3
Crisis

3.1 SPILL CONTINGENCY PLAN

A specific 'Spill Contingency Plan' which address the emergency response in case of environmental contamination has been developed. It details the response to spills of hazardous substances associated with project activities.

Details reported within the Spill Contingency Plan' 122018-SPCC-C-SH-PR-0025

3.2 MEDICAL EMERGENCY RESPONSE PLAN (MERP)

In the event of a serious accident, illness, or any other medical emergency during the PROJECT Operations, reference should be made to:

Medical Emergency Response Plan doc. n 122018-SPCC-C-SH-PR-0012

3.3 SECURITY EMERGENCY RESPONSE PLAN

In case of a Security Emergency, the Security Team will be alerted. Specific actions shall be contained in the Security Emergency Response Plan.

4 REFERENCE DOCUMENTS

PTTLNG, THAI and International References

- As reported within the Project SHE PLAN 122018-SPCC-C-SH-PR-0001

Specific for this Plan

- Project SHE PLAN 122018-SPCC-C-SH-PR-0001

This document is the property of SPCC who will safeguard its rights according to the civil and penal provisions of the Law.

5 RESPONSIBILITIES

5.1 SITE EMERGENCY TEAM (SET)

The Site ERP will be implemented via the CONTRACTOR Site Emergency Team (SET).

For the construction, pre-commissioning and commissioning activities, the SET will be composed by the following persons:

A. Emergency Management Manager (EMM): CONTRACTOR Site Manager or his delegate;

B. Emergency Response Team Coordinator (ERT Coordinator): CONTRACTOR SHE Manager or his deputy;

C. Incident Controller (IC): CONTRACTOR Construction Manager

D. Emergency Response Team : Fire brigade, Rescue Team and Medical Team.

5.2 EMERGENCY MANAGEMENT MANAGER (EMM)

The Emergency Management Manager shall be responsible for the overall direction of the emergency response strategy.

He shall:

- Manage every emergency scenarios along with ERT Coordinator;
- Maintain contact during emergency with ERT Coordinator in order to properly response in case of specific necessity;
- Establish the extent of the incident and the type of support required;
- Ensure proper line of communication with CONTRACTOR Management and PTTLNG representative (as per flowchart);
- Ensure that safe escape routes and assembly points are properly identified;
- Ensure that this document will be revised, when necessary.

The CONTRACTOR SM is the Emergency Management Manager and he shall appoint a competent person to carry out his duties and responsibilities in his absence.

5.3 EMERGENCY RESPONSE TEAM COORDINATOR

The SHEM at site is the Coordinator of the Emergency Response Team; he shall:

- Manage every emergency scenarios along with EMM;

This document is the property of SPCC who will safeguard its rights according to the civil and penal provisions of the Law.

- Coordinate, manage and promptly activate the ERT, providing information about the kind of emergency in order to obtain an adequate response by Team;
- Provide information and advice concerning the health and safety aspects of the response activities;
- Ensure that ERT is provided with all the equipment necessary to adequately response in case of every emergency;
- Ensure that ERT is composed only by competent and trained personnel;
- Ensure that all the employee involved in the activities are informed about the procedure to follow in case of emergency;
- Assign for each assembly point a dedicate safety officer;
- Ensure that this document will be revised, when necessary.

CONTRACTOR Deputy SHEM shall carry out above duties and responsibilities at site in the absence of the SHE Manager.

5.4 INCIDENT CONTROLLER (IC)

The Incident Controller, acting as logistics coordinator shall:

- Maintain continuous contact with EMM and ERT Coordinator during emergency;
- Arrange for the provision of additional equipment such as cranes, forklift, etc. to support activities of the ERT;
- Ensure the availability of emergency escape vehicles (buses) in appropriate number and at all times, for emergency evacuation.

  This position during the construction is covered by the Construction Manager in his absence he shall appoint a competent person to carry out his duties and responsibilities.

5.5 SAFETY HEALTH ENVIRONMENTAL OFFICER (SHE OFFICER)

The SHE Officer shall:

- Immediately inform ERT Coordinator about the emergency, specifying location and type of incident;
- Make an initial assessment of the severity of the incident;
- Maintain contact with the EMM and ERT Coordinator warn of potential for escalation of incident;
- On agreement with the EMM and ERT Coordinator, activate the Area Escape Alarm, thus ensuring that personnel escape to a safe assembly point away from the affected area;
- In the event of person missing, immediately inform EMM or ERT Coordinator in order to activate the search and rescue procedure.

This document is the property of SPCC who will safeguard its rights according to the civil and penal provisions of the Law.

5.6 EMERGENCY RESPONSE TEAM

Emergency Response Team shall be composed by competent and trained personnel and shall promptly respond when activated by ERT Coordinator. This team is composed depending on the kind of emergency by:

- Fire Brigade;
- Rescue Team;
- Medical Team.
- Security Team
- Support Team
- CSR Team
- Etc.

ERT shall check that emergency equipment are always in good condition, properly maintained and available in case of necessity.

ERT shall compose of a number of employee (SHE supervisor/officer) that during emergency shall guide workforce to dedicated Assembly Point.

ERT shall be available 24 hours per day, in order to properly response in case of emergency.

5.7 EMPLOYEE/WORKER

Each person who, once an emergency situation is detected, shall immediately inform the SO and/or supervisor of the area in order to start the emergency response process.

5.8 INTERFACE WITH SUBCONTRACTORS

CONTRACTOR and SUBCONTRACTORs will form an integrated Emergency Response Team (ERT).

The CONTRACTOR SM and SHEM are responsible for ensuring efficient communication with the key staff of the SUBCONTRACTORs.

All SUBCONTRACTORs will strictly apply this Emergency Response Plan and develop their own area specific Emergency response plan according to this and submit to the CONTARCTOR for the integration within the present document.

This document is the property of SPCC who will safeguard its rights according to the civil and penal provisions of the Law.

5.9 SUBCONTRACTORS RULES ON THE EMERGENCY RESPONSE ORGANIZATIONS

All SUBCONTRACTORs SHE Managers will be involved directly in the emergencies management as an integral part of the CONTRACTOR ERT.

SUBCONTRACTORs SHE Managers will interface themselves directly to the CONTRACTOR's Deputy SHEM and will inform their organization promptly to involve SUBCONTRACTORs Management, supervision and workers as soon as possible.

SUBCONTRACTORs shall issue its own emergency procedures to adhere completely to CONTRACTORs and PTTLNG requirements.

6 SITE EMERGENCY TEAM (SET)

6.1 ORGANISATION

Incident response on site will be implemented by the Site Emergency Team (SET).

The SET will comprise a group which will direct emergency response and which will implement on-the-ground emergency response activities.

Site Emergency Team shall establish the Dress Code i.e. Reflective Jackets.

Table no. A – Site Emergency Team (SET)

Emergency Role	Fulfilled one of the following:	Own by
Emergency Management Manager (EMM)	SM	CONTRACTOR
Incident Controller (IC)	Construction Manager (for the area)	CONTRACTOR
Emergency Response Team Coordinator	SHE / Deputy SHE Manager	CONTRACTOR
Emergency Response Team	Fire/Rescue/Medical Team	CONTRACTOR

The SET will gather in the designated Emergency Control Centre located in CONTRACTOR Site Office.

The office/trailer will be clearly indicated and equipped with the following items:

- Copy of Emergency Response Plan;
- Spare Radio with charger;
- Hot line to the Emergency Control Centre;

This document is the property of SPCC who will safeguard its rights according to the civil and penal provisions of the Law.

- A dedicated line to guarantee 24 hours connection with the PTTLNG;
- Maps and plant lay-out;
- Emergency lighting.

A copy of the ERP will also be distributed to:

- PTTLNG/PMC, in order to facilitate the coordination between the different emergency team;
- All the above responding personnel (SET) and entities;
- SUBCONTRACTOR personnel which will be integral part of the SET, whenever required.

6.2 DUTY AND CALL-OUT ROSTER

The EMM, or his delegate, shall ensure there is always a valid 24 hour Emergency Duty Roster identifying who fulfils the emergency roles and the automatic replacement if unavailable.

Dedicated Radio/emergency mobile phones shall be provided for each SET member.

6.3 MEANS OF COMMUNICATION

The primary means of communication for the SET, in case of emergency developed during construction, will be:

- ***Air horne***
- ***Radio (or walky-talky);***
- ***Mobile (only in authorized area);***

All personnel fulfilling a SET role shall have at all times a ***radio and/or mobile telephone*** with himself.

The Emergency alarm during the construction phase will be given by ***air horne, direct communication, megaphone or walky-talky***

7 ERP FOR CONSTRUCTION

Emergency situations occurring within project construction, areas will be managed according to the following sections, through the SET.

This document is the property of SPCC who will safeguard its rights according to the civil and penal provisions of the Law.

7.1 ALARM SYSTEMS

In case of emergency, the persons shall receive instructions from SET to proceed to the assembly points.

This will be done by radio (or walky-talky) or by alarm system. Alarm system has to be defined;

For **AIR HORNE use that is:**

- **3 short blast on air-horn (approx. 2 seconds each) will activate emergency situation FIRST AID; supervision will respond to the location, assess the situation and call appropriate emergency service.**
- **1 long blast on air-horn (approx. 5 seconds) will activate emergency situation EVACUATION;**

Upon receiving the instructions, all personnel shall proceed in an orderly manner to the nearest Assembly Point and await further instructions. Assign a designated person to proceed to the nearest access/egress gate to direct incoming emergency personnel services.

All other scenarios shall be prompt reported by using the radio / mobile phone system.

7.2 EMERGENCY RESPONSE PROCEDURE

In case of emergency, the person becoming aware of such emergency situation shall immediately inform the SHE Officer or his supervisor in the area.

SHE Officer /Supervisor shall immediately communicate with ERT Coordinator providing as clearly as possible:

- Exact location of the incident;
- Nature of the incident;
- Caller's name and location;
- other relevant information.
- Upon receiving notification by SHE Officer, ERT Coordinator shall inform the EMM in order to activate the SET.
- At this point, the ERT shall act in the area affected by emergency, based on the information received by the ERT Coordinator.
- At the activation of a local emergency alarm, the personnel shall:
- Stop all work at once;
- Shut down and make safe all equipment;
- Vacate the work place, following safety officer instructions proceeding in an orderly manner to the nearest assembly point and wait for further instructions;

This document is the property of SPCC who will safeguard its rights according to the civil and penal provisions of the Law.

- At the assembly point a roll call is taken and all the personnel are accounted, awaiting further instructions;
- Not return to work until a notification has been received from EMM by the ERT that it is safe to do so.

On being alerted to a **medical emergency**, the personnel shall respect as foreseen in the MERP, but basically must respect following instructions:

- Keep clear the zone affected by the emergency and remove any vehicles that could cause restriction to the emergency response team (follow the instruction of the SET) or of the ambulance services;
- Not disturb the accident scene;
- Not block the emergency operations;
- Return to work if safe to do so.

During any emergency situation, security personnel shall prevent any person or vehicle not authorized from entering in the incident area. Only authorized Emergency Service, SHE Staff and Project Staff will be allowed into the site incident area.

In the event of person missing:

- SET shall consider likely areas of the site to be searched;
- Provided it is safe to do so, the ERT will organize a systematic search of the area to recover missing persons, starting in the high risk areas;
- As soon as each area is found to be free of casualties, this information shall be transmitted to the EMM;
- Should gas be detected, a Rescue Team with breathing apparatus shall be activated to conduct the activities.

7.3 FIRE

All the personnel shall be instructed on location of fire extinguishers, evacuation routes, and muster points and alarm systems and how to alert them. ERT shall ensure that appropriate extinguishers for the potential types of fires are available.

In the event that a fire should occur, employees shall follow the following procedures, unless directed by the Fire Fighter of the ERT:

a. Inform your surrounding colleagues of the fire (i.e. Shout, “Fire”, “Fire”, “Fire”);

b. Look for a ERT member in the area;

This document is the property of SPCC who will safeguard its rights according to the civil and penal provisions of the Law.

c. If no ERT member intervened, try to fight a fire only if have been trained and you deem that it is possible;

d. Find appropriate Fire Extinguisher refer to table below on type of Fire Extinguisher and use it as below direction:

Most fire extinguishers operate using the following P.A.S.S. technique:

1. PULL – Pull the pin. This will also break the tamper seal.

2. AIM – Aim low, pointing the extinguisher nozzle (or its horn or hose) at the base of the fire.

3. SQUEEZE – Squeeze the handle to release the extinguishing agent.

4. SWEEP – Sweep from side to side at the base of the fire until it appears to be out. Watch the area. If the fire re-ignites, repeat steps 2 - 4.

If you have the slightest doubt about your ability to fight a fire... CALL EMERGENCY NUMBER! (refer to section 8.1 reporting of emergency situation)

CLASS	FUEL	USE	DO NOT USE
A	Combustible Materials	Water, Powder	
B	Flammable Liquid and Gasses	Foam, Powder, CO_2	Water (except for cooling and protection)
C	Energized Electrical Components	Powder, CO_2	Water (except for cooling and protection)
D	Metal	Special Powder, Sand	Any other extinguisher

e. Promptly evacuate the area and activate the alarm. Shut off equipment, any involved electric circuit and close down fuel sources, only if it can be done without risk.

f. When the fire alarm is started, all employees are required to proceed quickly, and orderly to the nearest muster point and alert others to do the same. They shall follow the evacuation procedures and the directions from ERT members.

g. Smoke is the greatest danger in a fire, so while evacuating from an area filled with smoke, use a wet handkerchief to protect mouth and nose.

h. Special attention shall be paid to ensure that persons with mobility, vision, or hearing disabilities are safely evacuated to a safe distance from the immediate emergency.

i. Employees shall not return to the evacuated area unless directed to do so by ERT Team. After any evacuation, employees shall report to muster point. They shall stay there until an accurate headcount is taken. Firefighting team personnel with the assistance of the fire watcher will conduct a roll call for all the workers. They must immediately notify the ERT Coordinator of any missing persons, if known.

This document is the property of SPCC who will safeguard its rights according to the civil and penal provisions of the Law.

7.4 DISASTER RESPONSE SUCH AS STRONG WIND, THUNDERSTORM, HEAVY RAINFALL, FLOODING, EARTHQUAKE, AND TSUNAMI

The risk of incidents involving disaster response such as strong winds, thunderstorm, heavy rainfall, flooding, earthquake and tsunami shall be reduced through proper works planning and weather forecast monitoring.

Watches are issued by relevant Meteorology and Geophysical Organizations to indicate when and where severe thunderstorms and/or tornadoes are most likely to occur. A severe thunderstorm watch implies that storms may develop to sufficient strengths to produce large losses. Information concerning severe weather that may require immediate action is analysed by Construction and followed up by SHE departments which shall access this information by continuously monitoring weather broadcasts.

Alarm shall be sounded when a severe weather watch or warning is announced. However, the clear instruction will be explained below when facing this situation;

A. Strong Wind

For the particular Site Location no strong winds are expected. The monthly wind average velocity ranges from 4 to 7 knots dominantly to the north, south, and south west. These values, classified in the Beaufort scale of winds with the scale number 1-3 (Light Winds) can not cause any disruption to activities or people involved.

The following precautions shall be observed in case of occasional strong winds:

In case of wind speeds over 47 km/h (25 knots, 13 m/s, measuring Beaufort 6, “Strong Winds”) measured at 20 m above sea level, the activities on elevation shall be stopped and only particular urgent operations shall be expressly authorized (e.g. securing temporary works).

Particular care shall be paid to working on elevation, where the wind speed is higher than the ground level, and in particular when walking on scaffolding, avoiding, on the same, the transport of materials, equipment and other objects which could fall on the area below.

Taking care of the housekeeping and the materials fastening on work places.

Lifting of plates and/or handworks with a high (surface/ weight) ratio as well as the lifting of people and/or materials inside of baskets, shall be carefully evaluated by the person in charge for the works, with regard to the wind speed, so as to prevent particular oscillations and lifted loads unstableness.

Insufficient protection from the wind action, during welding, cutting or scarfing can cause the spreading of smelting drops, with consequent risks due to the people contact and the fire triggers. In these conditions it should considered that also a small smelting drop which nestles in the planks interstices can be the cause of a fire.

This document is the property of SPCC who will safeguard its rights according to the civil and penal provisions of the Law.

B. Thunderstorm

In case of imminent thunderstorm or severe weather emergency occurred, a sound alarm will warn about the necessity of leaving the work places in outdoor areas.

It should be kept in mind that, in similar situations, lightning is the most dangerous phenomenon for human life.

The main prevention rules to be carried out before or during a thunderstorm are:

- Do not stay by or take cover below metal masses (yard outdoor frameworks, piping, scaffolds, etc.) specially being on the ground;
- Do not stay by cranes, excavators, heavy vehicles or equipment, poles and tower lights, wire ropes, fences;
- Do not stay by earth or power traps;
- Do not stay under trees;
- Do not stay by electric boxes or containers with electrical connected equipment;
- Inside of the workshops do not stay or touch metallic framework (pillars, steel external walls);
- Do not stay or shelter under beach umbrellas or other frameworks with pointed parts;
- Suspend the electrical maintenance activities on facilities (e.g. electrical cabins) and/ or power system connected machines;
- Use the phone only in necessity case, take the headphones off;
- If riding, get off and go away from the bike.

It is reminded that the danger exists even if the lightning strikes close by a person: the current of lightening does not directly “come into” the ground, as commonly one thinks, but it distributes on a surface losing its intensity as the person goes away from the fall point.

If a person goes away from the fall point walking at strides, the electric potential difference between the ground under a foot and the other can be dangerous determining involuntary muscles contractions, respiratory or cardiac arrest.

If the lightning strikes close to a person, therefore, it is recommended to go slowly off and, mostly, to take short steps.

If into a car or into a mean cabin, the risks are the least, but it is necessary to remember of:

- Closing windows and doors or hatches;
- Not to touch metal parts or the car radio;
- In case of the car is not made of metal, on no account, it is not to be considered safe.

This document is the property of SPCC who will safeguard its rights according to the civil and penal provisions of the Law.

In case a worker was observed being struck by a lightening, he would not result electrically charged and so touching him would not be dangerous. Anyone in the vicinity shall intervene promptly for the first-aid, if trained and qualified to do so, otherwise emergency help shall be sought.

All activities must cease during thunderstorms and personnel must remove themselves to the designated muster point.

ERT Coordinator to assign the ERT member to:

- Warn workers in his respective areas;
- Report the number of workers in the muster point;
- Report any persons injured or property damage to CONTRACTOR ERT Coordinator;
- ERT members will advise individuals in their area to:
- Remain calm. Do not run, panic, or cause others to panic;
- Quickly gather in small groups of 3-4 people and use the "buddy system" while moving to the nearest shelter.

All workers will remain at the recommended place until the "ALL CLEAR" is given by CONTRACTOR ERT Coordinator.

All radio users shall be instructed by SHE personnel to keep channels clear for emergency communications.

SHE and Construction personnel will continue to monitor the local weather conditions under direction of CONTRACTOR ERT Coordinator, and shall announce the "ALL CLEAR" status to all workers, when the Severe Weather WARNING is cancelled. Updates will be provided to workers, when possible, as to the status of the severe weather warning.

Protocol for lighting

When the flash/bang count is at 15 seconds, supervision will suspend all crane work and elevated work activities.

When the flash/bang count is at 9 second or less, all activities will be suspended and the site will be cleared. All employees will report to sheltered place at site (buildings, trailers etc.), where a head count will be done as per the evacuation protocols and the proper notification will be made.

All work will remain suspended until the decision to return to work is reached by the CONTRACTORS's Construction manager together with the SUBCONTRACTORS representatives at site.

This document is the property of SPCC who will safeguard its rights according to the civil and penal provisions of the Law.

C. Heavy Rainfall and Flooding

All efforts will be made to prevent flooding during the heavy rainfall.

The following action should be made to prevent the flooding; but not limited to:

- Make sure that roof's gutters at each building/workshop and downspouts are in good condition
- Periodic maintenance of the drainage system
- Periodically inspection on all the sewage pits

D. Earthquake and Tsunami

During an earthquake, employees shall remain calm and follow the steps below:

- IF INDOOR, employees shall seek refuge in a doorway, under a desk or table. Stay away from glass windows, shelves, and heavy equipment;
- IF OUTDOORS, employees shall move quickly away from buildings, utility poles, and other structures. Always avoid power or utility lines as they may be energized;
- IF IN A VEHICLE, they shall stop in the safest place available, preferably away from power lines and trees. Stop as quickly as safety permits;
- After the initial shock, evaluate the situation and wait for instructions from ERT;
- Employees shall protect their selves at all times & be prepared for aftershocks and tsunami;
- If hazards resulting from the earthquake should occur such as fires, hazardous material spills, and/ or power black-outs, employees shall contact SHE personnel and follow the Emergency Response established in this plan;
- All employees should be made aware on the suggested evacuation routes to the muster points, where assistance can be provided and the headcount is performed till the "all clear" is given;
- Employees shall be alerted for a massive tidal wave or Tsunami. If there is any sign of Tsunami, ERT members shall instruct workers to evacuate to the higher ground or inland, preferably by foot, especially after there has been a strong earthquake, causing damages to roads;
- If on a boat, when a tsunami is coming, it is suggested to leave the shore area/ harbour for the open water, where tsunami effects are minimal.
-

This document is the property of SPCC who will safeguard its rights according to the civil and penal provisions of the Law.

7.4.1.1 Machinery or Equipment Failure

In the event of the machinery failures immediately call the and report to Site Supervisor. Assess the situation and immediately shutdown the machinery. Consider consequences:

- Potential spillage
- Potential fire occur

Liaise with the SITE management team in order to assess the potential property damage.

7.4.1.2 Vessel/Barge Collision/ Mooring Failure

In the event that collision occurs between the Vessel with other vessels or mooring failure during berthing at Construction Site location the emergency call to ERT Coordinator shall be done immediately liaise with Marine Work Team to assess the situation; the SUBCONTRACTOR in charge for the operation shall ensure the below assessment completed and full capability in the response:

- Extent of damage caused – on both affected facilities;
- Likelihood of continuing failure of both facilities induced by the collision;
- Necessity for Partial/Total evacuation of the barge;
- Activate the Evacuation Procedure;

When reporting such incident/ accident refer to Incident Investigation and Reporting (Doc. No. 122018-SPCC-C-SH-PR-0014), the following information is required:

- Size or weight of colliding facility/ vessel;
- Name and Port of Registry of the Vessels;
- Locations related to the facilities;
- Whether it is completely or partially “disabled”;
- Present weather conditions i.e. wind, roll, current, tide, etc.;
- Weather focuses and reports;
- Other vessels available in the vicinity of the incident/ accident

7.4.1.3 Transportation Incident

In case of transportation accident the following prompts apply:

- Coordinate evacuation of the Injured Person (IP) to the safe area;

This document is the property of SPCC who will safeguard its rights according to the civil and penal provisions of the Law.

- Call an emergency number;
- Determine level of escalation requirements;
- Coordinate first aid treatment, if trained to do so, until arrival of the ambulance/medical assistance;

Request further resources as may be required;

- Advice the Police as required under the Thailand Road Traffic Regulations, if the incident happened outside of the boundaries of the construction site;
- Ensure adjacent equipment/ plant is moved to a safe area (subject to incident non-disturbance requirements);
- Remain at the location until all injured personnel have been treated/ evacuated and the site has been made safe;
- Advise appropriate person of incident status, number of casualties, or extent of property damage and CONTRACTOR SHE Department – SECURITY Coordinator and HR Manager in order to initiate incident reporting.

7.4.2 SECURITY

7.4.2.1 Security Coordinator

The Security Coordinator is responsible for the supervision and control of security personnel and their performance during an emergency situation. The Security Coordinator shall ensure the instructions he provides to Security Officers (as well as the Security Officers' conduct) comply with the terms of the contract and Company expectations.

7.4.2.2 Security Personnel

The Security Personnel shall be responsible for:

- Registering the Visitor and giving them the Visitor Badge;
- Bringing the visitor log book to be used to re-check the visitors in the muster point;
- Acting as Fire Watcher on their respective areas;
- Ensuring the exit door from office area is available to pass without any obstruction;

Directing the employees/ visitors to the nearest emergency exits and muster point, preventing running or lagging behind and ensuring traffic roles are observed.

This document is the property of SPCC who will safeguard its rights according to the civil and penal provisions of the Law.

7.4.3 Evacuation

Evacuation of the entire project areas is unlikely to be required but in case will be required all personnel have to stop all activities, clear the area and immediately proceed to the designated site assembly points.

7.4.4 Head Count

- The supervisor/foreman of each working team is responsible for the headcount of its working partners.
- SHE officers are responsible for collecting/accumulating total headcount and have to make sure that all personnel are present with compare of Register File ID access system.
- Rescue operation will start to find out missing personnel, if any.

7.4.5 Emergency Equipment Checklist

During Construction phase following equipment shall be inspected on weekly basis.

Emergency Equipment Checklist for		
Guard Light	Flashlight & Extra batteries	Emergency Contact Sheet
Hard hats/ear protection;	Pocket knife	Evacuation Plan
Leg protectors, approved safety footwear;	First Aid Kit	Local Maps
Goggles/safety glasses with side shields;	Dust Masks	Stretcher and blankets;
Whistle	Fire Extinguisher	Ambulance; emergency vehicle; emergency rescue boat.
Walkie-talkie	Wrench/Saw	Gloves

7.5 TRAINING

The principles and most important information about Emergency Response Plan shall be gathered in:

- CONTRACTOR SHE Induction;
- Regular meetings to explain and understand the emergency procedures;
- Pre-job Safety Meeting and Tool Box Talk.

All SET member shall participate to specific training which advice and inform them about their duty and responsibilities in case of emergency.

This document is the property of SPCC who will safeguard its rights according to the civil and penal provisions of the Law.

Dedicated training has be done for ERT members.

Training sessions for CONTRACTOR personnel shall be documented by the DEPUTY SHEM.

SUBCONTRACTORs SHE Manager shall ensure training sessions for their personnel to familiarize them with the Emergency Response Plan.

7.6 EMERGENCY DRILLS

- SHEM at site shall prepare a dedicated plan to test and simulate on monthly basis, the response in case of emergency.
- ERT Coordinator shall supervise the Emergency Drills and shall prepare a report to summarize the findings and evaluate possible actions to improve the method/operations. The report shall be shared with CONTRACTOR organization.
- The schedule shall consider new workers and SUBCONTRACTOR arrival on the project in order to include them in the drills.
- Emergency Drills shall include all the foreseen scenarios.(For Emergency Drills form refer to section 10)
- Emergency drills shall cover all foreseen scenarios as identified in sect 12.

7.7 MEDICAL FIRST AID FACILITIES

Inside medical facility (first aid room/clinic) all the equipment shall be periodically checked at least on monthly base by the Nurse/Medical staff in accordance with the number of employees and the relevant medical needs.

After using the First Aid Kit, the Medical staff shall ensure that First Aid Kit is re-furnished and available.

Urgent cases will be evacuated to the Hospital at given numbers in section 8.2 .

7.8 PROCEDURE UPDATE/ REVISING

Document will be updated when:

- In case of a change of the legislation/ regulation or revision from authority.
- In case of management of change.
- After completion of the emergency drill or after the occurrence of emergency situations (if necessary)
- Assessment and reviewing to be taken in Annual basis whether they are still relevant with the PROJECT needs.

This document is the property of SPCC who will safeguard its rights according to the civil and penal provisions of the Law.

7.9 EMERGENCY MANAGEMENT FLOWCHART

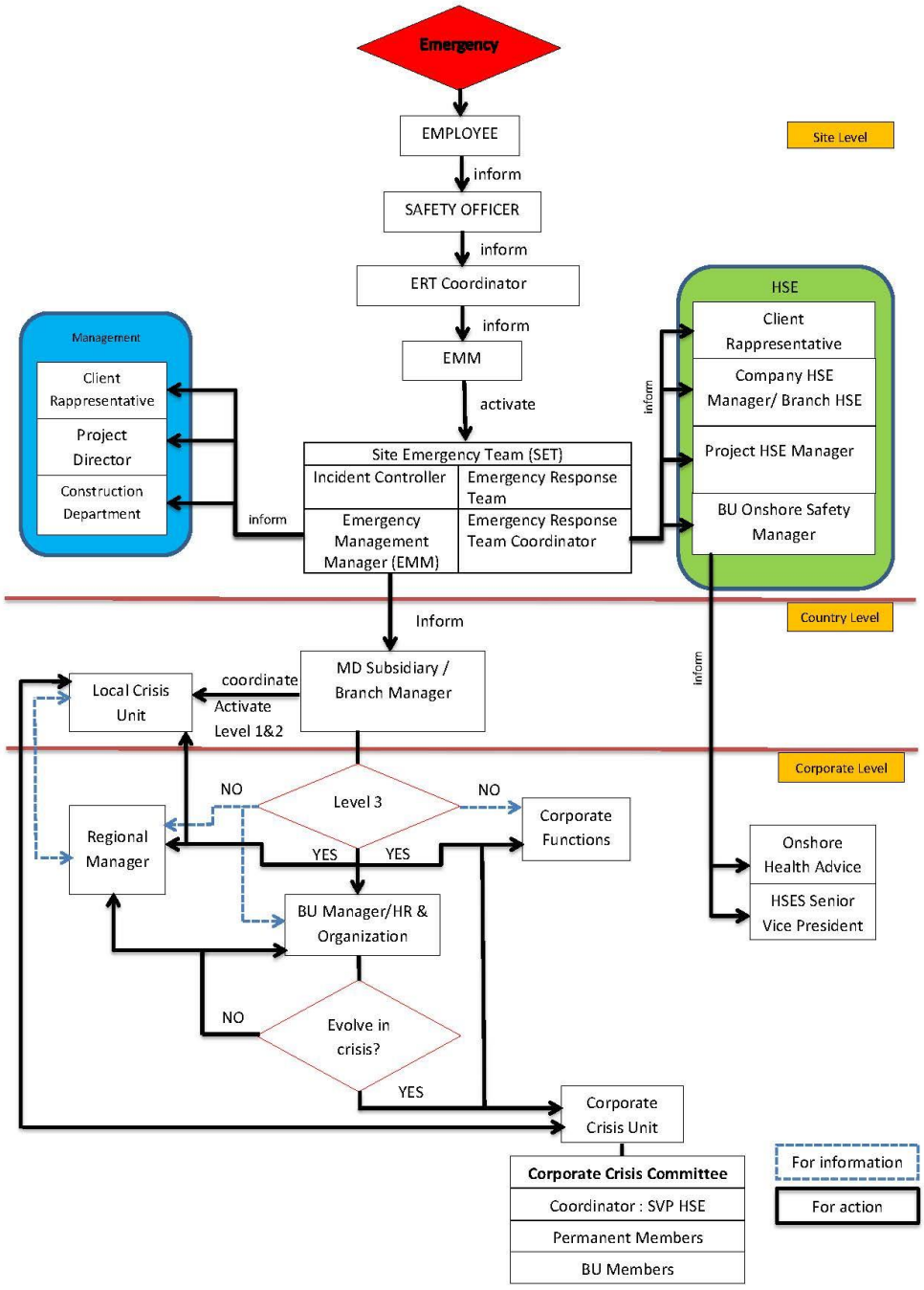

This document is the property of SPCC who will safeguard its rights according to the civil and penal provisions of the Law.

8 SITE EMERGENCY CONTACT NUMBERS

8.1 SITE EMERGENCY CALL (FOR REFERENCE) AT SITE THIS PART SHALL BE UPDATED BASED ON THE NEEDS

SITE EMERGENCY CALL

SPCC Site Emergency Contact

Name	Position	Mobile Phone
[redacted]		

SUBCONTRACTOR On Site Representative/Contact Point

Name	Position	Mobile Phone
[redacted]		

SITE EMERGENCY RESPONSE TEAM(S) (ERT) SPCC and SUBCONTRACTORS

NAME	POSITIONED (WORK PLACE/OFFICE)	CONTACT NUMBER
[redacted]		

This document is the property of SPCC who will safeguard its rights according to the civil and penal provisions of the Law.

8.2 EMERGENCY CONTACT DIRECTORY

IN AN EMERGENCY SITUATION THE UNDER LISTED CONTACT NUMBERS CAN BE REACHED TO ACTIVATE EMERGENCY RESPONSE ACCORDING TO THE EMERGENCY MANAGEMENT FLOWCHART (7.9)

HOME OFFICE FUNCTIONS						
N°	**POSITION**	**NAME**	**MOBILE**	**EMAIL**	**WHF RADIO CHANNEL**	**ROLE INTO THE EMERGENCY**
1	CONSTRUCTION DEPARTMENT	[redacted]			NA	NOTIFIED BY SITE MANAGER (EMM)
2	BU ONSHORE SAFETY MANAGER				NA	NOTIFIED BY SHE MANAGER
3	MANAGING DIRECTOR				NA	NOTIFIED BY EMM, ACTIVATE THE LCU
4	PROJECT DIRECTOR				NA	NOTIFIED BY SITE MANAGER (EMM)
5	DEPUTY PROJECT DIRECTOR				NA	NOTIFIED ON BEHALF OF PD BY SITE MANAGER (EMM)
6	SHE MANAGER				NA	NOTIFIED BY SITE SHE MANAGER (ERT COORDINATOR)
SITE EMERGENCY TEAM - SET						
N°	**POSITION**	**NAME**	**MOBILE**	**EMAIL**	**WHF RADIO CHANNEL**	**ROLE INTO THE SITE EMERGENCY**
1	SITE MANAGER	[redacted]			TBD	EMERGENCY MANAGEMENT MANAGER (EMM) INFORM MANAGING DIRECTOR
2	CONSTRUCTION MANAGER OF BOP				TBD	AREA INCIDENT CONTROLLER (BOP-IC)
3	CONSTRUCTION MANAGER MARINE WORKS				TBD	AREA INCIDENT CONTROLLER (MW-IC)
4	CONSTRUCTION MANAGER …				TBD	AREA INCIDENT CONTROLLER (….)
5	DSHE MANAGER				TBD	ERT COORDINATOR
6	SHE COORDINATOR				TBD	DEPUTY ERT COORDINATOR
7	HEALTH	TBD	MOB. ……..		TBD	ERT HEALTH

This document is the property of SPCC who will safeguard its rights according to the civil and penal provisions of the Law.

	COORDINATOR		SITE CLINIC ……..			LEADER
8	SECURITY COORDINATOR	[redacted]			TBD	ERT SECURITY LEADER AND SUPPORT EMM FOR THE COMMUNICATION WITH THE LOCAL AUTHORITIES
9	INTERFACE CSR MANAGER					SUPPORT EMM FOR THE COMMUNICATION WITH THE LOCAL AUTHORITIES
10	SHE AREA OFFICER MARINE WORKS					INFORM ERT COORDINATOR
11	SHE AREA OFFICER BOP					INFORM ERT COORDINATOR
12	SHE AREA OFFICER TANK					
13	ENVIRONMENTAL SPECIALIST					ERT ENVIRONMENTAL LEADER (ENV INCIDENT / EMERGENCY)
14	SITE NURSE					SUPPORTING ERT HEALTH LEADER AND ACTING AS DEPUTY

SUBCONTRACTOR SITE EMERGENCY TEAM - SET BOP						
N°	POSITION	NAME	MOBILE	EMAIL	WHF RADIO CHANNEL	ROLE INTO THE SITE EMERGENCY
	PROJECT MANAGER					EMERGENCY MANAGEMENT MANAGER (EMM)
	CONSTRUCTION MANAGER					INCIDENT CONTROLLER (IC)
	SHE MANAGER					EMERGENCY RESPONSE TEAM COORDINATOR
						EMERGENCY RESPONSE TEAM MEMBER

This document is the property of SPCC who will safeguard its rights according to the civil and penal provisions of the Law.

SUBCONTRACTOR SITE EMERGENCY TEAM - SET MARINE WORKS						
N°	**POSITION**	**NAME**	**MOBILE**	**EMAIL**	**WHF RADIO CHANNEL**	**ROLE INTO THE SITE EMERGENCY**
	PROJECT MANAGER					EMERGENCY MANAGEMENT MANAGER (EMM)
	CONSTRUCTION MANAGER					INCIDENT CONTROLLER (IC)
	SHE MANAGER					EMERGENCY RESPONSE TEAM COORDINATOR
						EMERGENCY RESPONSE TEAM MEMBER

INTEGRATED TEAM CONTRACTOR AND SUBCONTRACTORS – FIRST AIDERS AND FIREFIGHTERS						
N°	**POSITION**	**NAME**	**MOBILE**	**EMAIL**	**WHF RADIO CHANNEL**	**ROLE INTO THE SITE EMERGENCY**

This document is the property of SPCC who will safeguard its rights according to the civil and penal provisions of the Law.

8.3 SITE PTTLNG/PMC REPRESENTATIVE NOTIFICATION NUMBER

PTTLNG and TGES Site Representative to be notify

Name	Position	Mobile Phone
[redacted]		

8.4 EXTERNAL/ PUBLIC SITE EMERGENCY CONTACT NUMBERS

Hospital Table.

Item	Hospital Name	Telephone
1	Rayong Hospital	038 611104
*2	Princess Sirinthorn Maptaphut Hospital http://www.maptaphuthospital.com	038 684444
*3	Banchang Hospital	038 603995
4	Nikompattana Hospital	038 038050-1
*5	Bangkok Rayong Hospital	038 921999
6	Ruamphat Rayong Hospital	038 860890-3
*7	The Mongkut Rayong Hospital	038 691800
11	Queen Sirikit Hospital	038 245700
*12	PTT GC Emergency Control Center http://www.npc-se.co.th	038 977700

Note 1. In **Rayong** for severe cases the hospital to go are *3 Banchang Hospital;

*5 Bangkok Rayong Hospital for No Thai speaking emergencies to reach Bangkok Hospital Rayong (call 1719 international call centre).

This document is the property of SPCC who will safeguard its rights according to the civil and penal provisions of the Law.

Note 2. *7 CTCI personnel - The Mongkut Rayong Hospital

Note 3. *2 This Hospital is the closest (6.5km/ 9 min.) to SITE, but Thai language only and open 24/7, Number to call (in Thailand) is ***1669***; public ambulance arrives within 4 minutes.

Note 4. *12 This clinic centre is just 700 meters away from SITE and with ambulances on standby.

Nurse Emergency Alert Centre Rayong **1669**

This document is the property of SPCC who will safeguard its rights according to the civil and penal provisions of the Law.

8.6 POLICE OFFICES NUMBERS

POLICE

Name	Place	Mobile Phone
Police Center	All areas	191
Rayong Provincial Police Station	Rayong	038 611 111, 038 613 676
Map Ta Phut Police Station	Map Ta Phut	| 038607 111
Banmang Police Station	Banchang	038 601 111
Nikhom Pattana Police Station	Nikhom Pattana	0 3863 6111
Huay Pong Police Station	Huay Pong	038 683 100

8.7 FIRE DEPARTMENT NUMBERS

Fire Department

Name	Place	Mobile Phone
Firefighters Center	All areas	199
Rayong Fire Department	Rayong	038 611 145
Map Ta Phut Fire Department	Map Ta Phut	038 675 562 , 038 636 438
Banchang Fire Department	Banchang	038 695 271
Rescue, Sawangporn Charity, Rayong	Rayong	038 611 092
Rescue ,Siam Deemsha (Pu Inin), Rayong	Rayong	038 636 859

This document is the property of SPCC who will safeguard its rights according to the civil and penal provisions of the Law.

This document is the property of SPCC who will safeguard its rights according to the civil and penal provisions of the Law.

9 ASSEMBLY POINTS FOR THE SITE PREPARATION (as reference)

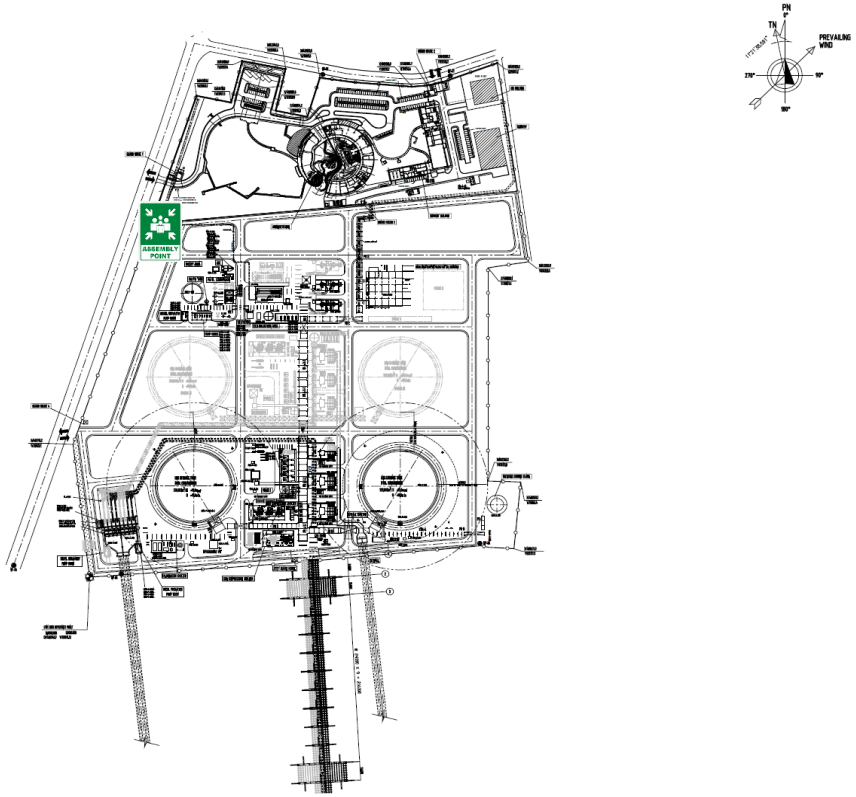

ASSEMBLY POINT CLOSE TO THE GATE 2

This document is the property of SPCC who will safeguard its rights according to the civil and penal provisions of the Law.

10 EMERGENCY DRILL FORM

EMERGENCY DRILL FORM			DATE	
			REVISION	
DRILL DATE		TIME		
TYPE OF DRILL (mark x in the corresponding column)				
	Announced		Unannounced	
	Fire		Medical	
	Oil/Chemical Spill		Confined Space Rescue	
	Civil Unrest		Multiple Casualties	
	Rescue		Other (Specify)	
DRILL INITIATED BY				
	NAME	POSITION	SIGNATURE	
PERSON IN CHARGE				
	NAME	POSITION	SIGNATURE	
DRILL SCENARIO (Description of Drill Process and activities simulated)				
SCENARIO: SCOPE: OBJECTIVES: EMERGENCY RESPONSE TEAM: OBSERVERS:				
DRILL TIMINGS:				
POSITIVE ITEMS:				
NEGATIVE ITEMS AND CORRECTIVE ACTIONS:				
	OBSERVATION	CORRECTIVE ACTION	RESPONSIBLE PERSON	DUE DATE

This document is the property of SPCC who will safeguard its rights according to the civil and penal provisions of the Law.

11 EMERGENCY DRILL PLAN 2018

		EMERGENCY DRILL 2018																		
DRILL TYPE						Oct.					Nov.					Dec.				
No.	DESCRIPTION	PARTICIPANT	EMERGENCY LEVEL		38	39	40	41	42	43	44	45	46	47	48	49	50	51	52
1	Fire	DEDICATED TEAMS in the area	1														X		
2	FIRST AID / MEDEVAC	DEDICATED TEAMS	1						X									X	
3	Severe Weather	BOP	1										X						

12 EMERGENCY AND CRISIS SCENARIO

BU-ON Emergency scenarios

This document is the property of SPCC who will safeguard its rights according to the civil and penal provisions of the Law.

This document is the property of SPCC who will safeguard its rights according to the civil and penal provisions of the Law.

Reply to PTTLNG Comments

PTTLNG Transmittal No. : R-122018-SPCC-PTT-T-32263
PTTLNG Document No. : 122018-SPCC-C-SH-PR-0039
Revision : F1
Title : Emergency Preparedness and Response Plan For Commissioning

Date: 28/09/2021

No.	Rev.	Pages and articles referring	PTTLNG/PMC Comments	SPCC Reply	PTTLNG/PMC Reply
1	R2	pp.5, Sec. 3	General comment; revise "Saipem" to be "SPCC"	Update wording SAIPEM to SPCC.	Noted
2	R2	pp.5, Sec. 3	Shall be revised to align with PTTLNG Emergency response plan guide line. For, Emergency level-3 shall include to mention to neighbor Industrials and Local community to get an impact" and Emergency level 3 will be assistance / supported and commanded by the relevant Corporate functions and/or authorities and public administrations of Province.	Noted and revised	Noted
3	R2	pp.7, Sec. 5	Please re-check what the requirement is needed to be complied with IEAT regulations.	No requirement is to comply with IEAT regulations.	Noted
4	R2	pp.8, Sec. 6	Please consider to add more potential of emergency (Refer to PTTLNG Emergency response Plan Guideline) such as: - LNG leakage - Jetty impact such as ship collision - Disaster of Nature such as Earthquake, High wave - Disease Outbreaks (extremely) - Man Overboard from Jetty (extremely - etc.	• LNG spillage/leakage and Gas clouds • Jetty impact such as ship collision • Disaster of Nature such as Earthquake, High wave • Disease Outbreaks (extremely) • Man Overboard from Jetty (extremely	Noted
5	R2	pp.9, sec.6	Please add neighbor Industrials and Local community to get an impact refer to the same comment on page 5	Update accordingly	Noted
6	R2	pp.9, sec.6	Please move it up	Update accordingly	Noted
7	R2	pp.10, sec.6	Please move it up	Update accordingly	Noted

No.	Rev.	Pages and articles referring	PTTLNG/PMC Comments	SPCC Reply	PTTLNG/PMC Reply
8	R2	pp.10, sec.6	Shall be insufficient	Update accordingly	Noted
9	R2	pp.10, sec.6	Even though this statement is able refer to 122018-SPCC-C-SH-PR-0025 Project Spill Contingency Plan Procedure but also need to revise statement on item 7 OIL SPILL OFFSHORE MITIGATION MEASURES, bullet (1) first paragraph "A sufficient number of sea fence boom for Commissioning activities atleast 250 meters oil boom for quick deployment"	This comment already mention on item 8 COMMISSIONING SPILL PREVENTION PLAN second paragraph bullet (2)	Noted
10	R2	pp.11, sec.6	Please move it up	Updated accordingly.	Noted
11	R2	pp.11, sec.6	The Security Plan shall be specified only for commissioning and Start-up	Refer to the Security Plan (122018-SPCC-C-SH-PR-0029). -As per project requirements and reasons related HSSE and/or Construction and/or Commissioning, it can be necessary to open new gates or to change the status of the mentioned gate. For any changes related to the gates SPCC will inform PTTLNG/PMC, Under any case all gates will be provided with security checks and personnel.	Noted
12	R2	pp.11, sec.6	Please consider to add statement of Lighting fixtures shall be specified the types of lighting equipment for using at Commissioning and Start-Up area	Updated accordingly.	Noted

No.	Rev.	Pages and articles referring	PTTLNG/PMC Comments	SPCC Reply	PTTLNG/PMC Reply
13	R2	pp.13 sec.7	General comment; Please put in Abbreviation and clarify its meaning. Or, Please recheck this abbreviation is correct or not (PHSEM at page 6?).	Updated accordingly.	Noted
14	R2	pp.15, sec.7	Please include Ambulance	Updated accordingly.	Noted
15	R2	pp.15, sec.7	Not only "competent and trained personel" and shall also include "certified, at least intermediate fire fighting ".	Include the fire fighting and/or rescue certified	Noted
16	R2	pp.19, sec.8	The responsible for Emergency level 3 will be assistance / supported and commanded by the relevant Corporate functions and/or authorities and public administrations of Province. (as the same comment on page 5)	The PHSEM coordinate with the relevant Corporate functions and/or authorities and public administrations of the Province to assist/supported and commanded	Noted
17	R2	pp.20, sec.8	Please consider to use PA/ GA alarm system instead of radio/ phone for Commissioning	PA/ GA alarm system and /or manual siren and/or two-way radio (explosion-proof type (Ex)):	Noted
18	R2	pp.20, sec.8	This paragraph, please clarify; - When the workers hear the alarm in the first time, he/she shall proceed to move to muster point without further notices like an Emergency Evacuation Level 1,2 and 3. is it correct?	Refer to comment on page 20. Also, Please refer to document No.122018-SPCC-C-SH-PR-0010 F2 Emergency Preparedness and Response Procedure page 17/27 item 7.1 ALARM SYSTEMS	
19	R2	pp.21, sec.8	Please add "Explosive"	Updated accordingly.	Noted
20	R2	pp.21, sec.8	Please additional clarify number of Firefighting Team and Standby Fire Suits for Emergency cases during the Commissioning and shall be adeqquated and prepared at site.	The number of Firefighting Team and Standby Fire Suite shall be identify on the Pre-Fire Plan for commissioning	Noted

No.	Rev.	Pages and articles referring	PTTLNG/PMC Comments	SPCC Reply	PTTLNG/PMC Reply
21	R2	pp.22, sec.8	similarly comment on page 10	Project Document “122018-SPCC-C-SH-PR-0040 Waste Management Plan for Comissioning”.	Noted
22	R2	pp.22, sec.8	Please add number of Chemical & Spill Kits and the competency environment management team include but not limited to: - Adequate equipment for standby to use in any emergency cases during Commissioning - Special PPE for hazardous material control to be prepared. ***above list shall be covered Onshore and Offshore then list out and Co-inspection by Client**	The number of Chemical & Spill Kits including ERT shall comply with the minimum Project requirement.	Noted
23	R2	pp.23, sec.8	Please describe how to manage the access/egress and Emergency Evacuation exit route in Commissioning area.	The access/egress shall provide the security guard control and the Emergency Evacuation exit route in the commissioning area shall designate to be safe places up to the emergency situation and wind direction.	Noted
24	R2	pp.23, sec.8	Please clarify the alarm tone system of each Emergency level 1, 2 and 3 such as : - What kind of siren tone for each emergency level (1,2 and 3) - How to proceed when hearing siren i.e. 1st, 2nd and 3rd times. - Is there specified of siren tone when Emergency is under control	The kind of siren tone shall estimate and communicate to the concerned person by the training program and Project ID badge.	Noted
25	R2	pp.27, sec.12	Please check and correct to right place (Gas Plant)	Updated accordingly.	Noted
26	R2	pp.27, sec.12	Please list out the Emergency Facilities including with number of each Emergency equipment to comply with the minimum as project requirements.	(Ref. from [5] to [12]).	Noted

No.	Rev.	Pages and articles referring	PTTLNG/PMC Comments	SPCC Reply	PTTLNG/PMC Reply
27	R2	pp.27, sec.12	In adddition, First Aid Facilities shall be list out including with the number of each Emergency Equipment to comply with the minimum Project requirements.	First Aid Facilities and the number of the Emergency equipment shall comply with the minimum Project requirement.	Noted
28	R2	pp.28, sec.12	please move it up one step	Updated accordingly.	Noted
29	R2	pp.28, sec.12	-Refer to previous comment. - Oil Spill Facilities shall be listed out including with number of each Emergency Equipment to comply with the minimum of the Project requirements.	The number of Chemical & Spill Kits including ERT shall comply with the minimum Project requirement	Noted
30	R2	pp.28, sec.12	Wind sock installation location shall be marked on the plot plan layout	Wind sock installation shall be marked on the plot plan layout put on the Pre-Fire Plan for commissioning	Noted
31	R2	pp.28, sec.12	"What type of Radio?"	(explosion-proof type (Ex))	Noted
32	R2	pp.28, sec.12	"List as per item 12.1"	(Ref. from [5] to [12]).	Noted
33	R2	pp.28, sec.12	Please refer to attachment XXX	(refer to APPENDIX 1 - Emergency Contact Numbers)	Noted
34	R2	pp.28, sec.12	Please consider to add equipment include but no limited to - CCTV.	13.CCTV shall comply with the minimum Project requirement	Noted
35	R2	pp.29, sec.12	please move it up one step	Updated accordingly.	Noted
36	R2	pp.29, sec.12	(Special)	Updated accordingly.	Noted
37	R2	pp.29, sec.12	Emergency Special PPEs shall be listed out with total number of each.	The number of Emergency Special PPE shall comply with the minimum Project requirement	Noted

No.	Rev.	Pages and articles referring	PTTLNG/PMC Comments	SPCC Reply	PTTLNG/PMC Reply
38	R2	pp.29, sec.13	/ Explosion & Evacuation	Updated accordingly.	Noted
39	R2	pp.29, sec.13	Please consider add simulation for “Gas leakage”	Spillage/leakage and Gas clouds	Noted
40	R2	pp.32,	PTTLNG/PMC Key persons (Emergency Team) shall be listed one more table	Updated accordingly.	Noted
41	R2	pp.32	What is the difference meaning between PHSEM?	Updated accordingly.	Noted
42	R2	pp.32	PTTLNG/PMC Key personal (Emergency Team) shall be listed in new table	Updated accordingly.	Noted
43	R2	pp.32	Please move it down one step	Updated accordingly.	Noted
44	R2	pp.34	PTTLNG/PMC Terminal-1 Fire Brigade	Updated accordingly.	Noted
45	R2	pp.34	Please move it down	Updated accordingly.	Noted
46	R2	pp.34	SPCC shall be listed out of all involved of Local Communities are needed to be informed the Emergency Situations for each Level	Updated accordingly.	Noted
47	R2	pp.36	1. Please consider specific Muster Points location and shall be separated depend on each Commissioning activity and area. 2. The Escape route line of Evacuation needs to be specific on plot plan in both Onshore and Offshore. 3. Where is proper windsock location needed to be installation of both Onshore and Offshore? (update for commissioning period) 4. No more temp. pond # 2 please update plot plan.	Confirm with revised. -The proper windsock and Escape route shall identify on the Pre-Fire Plan for commissioning	Noted

No.	Rev.	Pages and articles referring	PTTLNG/PMC Comments	SPCC Reply	PTTLNG/PMC Reply
48	R2	pp.37	Medical	Updated accordingly.	Noted
49	R2	pp.37	Please consider to be amended "Overall Emergency Medical Management and Communication Flowchart" The detail of this flowchart shall be explained the information of Emergency's scope but not limited to; 1. Category level of Emergency for Commissioning 2. Communication channel (Radio & Phone) including with External Parties. 3. Classification which is the level of Emergency is required to communicate to Internal/External parties. 4. Sequence of Emergency Response Plan shall be running by not limited to; 4.1 Notice of Emergency 4.2 Evacuate level of Emergency and notice to perform evacuation/move to designated Muster Points. 4.3 Control the event as per Emergency Response Procedure. 4.4 Initial Press Release. 4.5 Notice of Event is under control. 4.6 Investigation meeting. 4.7 Provide the Corrective Action and Preventive Measures (Restoration) 5. Item 1-4 to be responsible by "Whom?"	Updated accordingly.	
50	R2	pp.38	DRILL NO:	Updated accordingly.	Noted
51	R2	pp.38	Shall be considered of the Level of Emergency Drill.	Updated accordingly.	Noted

PTTLNG Transmittal No. : R-122018-SPCC-PTT-T-32263
PTTLNG Document No. : 122018-SPCC-C-SH-PR-0039
Revision : F1
Title : Emergency Preparedness and Response Plan For Commissioning

No.	Rev.	Pages and articles referring	PTTLNG/PMC Comments	SPCC Reply	PTTLNG/PMC Reply
52	R2	pp.39	Please specific the Responsible person; - Prepared by ..... - Aprroved by	Responsible persons for Drill report were mentioned on the right bottom of the page	Noted
53	R2	pp.40	Please Delete	Noted and revised.	Noted
54	R2	pp.40	Please add Marine dept. on list	Updated accordingly.	Noted

PTTLNG Nong Fab LNG Receiving Terminal Project

SAIPEM SPCC Joint Venture

EMERGENCY PREPAREDNESS AND RESPONSE PLAN FOR COMMISSIONING

DOC CLASS Z2

[redacted]

REV.	STATUS	DATE	REVISION DESCRIPTION	BY	CHK.	APPR.

CONTENTS

1. INTRODUCTION 4

2. SCOPE 4

3. DEFINITIONS 5

4. ABBREVIATIONS 6

5. REFERENCE DOCUMENTS 6

5.1. Thailand National Laws 6

5.2. Codes and International Standards 7

5.3. Project Reference Documentation 7

6. EMERGENCY CASES 7

6.1. Emergency Levels 9

6.2. Pre-fire planning 10

6.3. Spill Contingency Plan 10

6.4. Medical Emergency Response Plan (MERP) 11

6.5. Security Plan 11

6.6. Lightning Policy 11

7. EMERGENCY RESPONSE ORGANIZATION, ROLES & RESPONSIBILITIES 12

7.1. General 12

7.2. Organisation 13

7.3. Responsibilities 13

8. MANAGEMENT OF EMERGENCY RESPONSE 19

8.1. General 19

8.2. Declared Emergency 19

8.3. Emergency Level 1 19

8.4. Emergency Level 2 19

8.5. Emergency Level 3 20

8.6. Alarm System 20

8.7. Emergency Instructions 21

8.8. Fire Accident 21

8.9. Environmental Emergency 22

8.10. Other General Emergency 22

8.11. Communication 23

8.12. Actuation 24

9. MEDICAL EMERGENCY RESPONSE PLAN (MERP) 24

9.1. Risk Management 24

9.2. Medevac Exercise 25

10. NOTIFICATION AND REPORTING 26

11. TRAINING 26

12. EMERGENCY PREPAREDNESS 27

12.1. Emergency Facilities 27

12.2. Emergency Rooms 28

12.3. Emergency PPE 29

13. EMERGENCY DRILLS 29

14. EMERGENCY SYSTEM TESTING 29

15. REVIEW 30

16. APPENDIX 1 - EMERGENCY CONTACT NUMBERS 30

17. APPENDIX 2 – ASSEMBLY POINTS FOR EVACUATION AT PROJECT 30

18. APPENDIX 3 – EMERGENCY MANAGEMENT FLOW CHART 30

19. APPENDIX 4 - EMERGENCY DRILL FORM 30

20. APPENDIX 5 - EMERGENCY AND CRISIS SCENARIOS 30

1. INTRODUCTION

The purpose of this document is to ensure that all foreseeable emergency situations arising during pre-commissioning, commissioning, start up and test of the new plant, particularly for offshore where distance (5 km +) from transport and emergency facilities will be developed, properly identified, reported and dealt with in a safe and effective manner.

This Emergency Response Plan covers:

- Nomination of persons responsible for managing an emergency situation;
- Definition of roles/responsibilities of emergency response team;
- Procedures for reporting, communicating and response action in an emergency;
- Monitoring, testing and maintenance of alarm systems and early warning devices;
- Training requirement including mock drill exercises for emergencies;
- Rescues and medical treatment of casualties.

It is the responsibility of the CONTRACTOR Project Manager to ensure that all personnel, including visitors, are made fully aware of the contents of the emergency response procedures and receive information and induction training as necessary. The information and the training shall be documented.

This Emergency Response Plan describes the initial response actions, resource mobilisation, training in emergency response, and testing in respect of incidents which could occur during pre-commissioning and commissioning of the project, where an incident may arise on the work site.

Note:

This document is a living document and gives an initial guide/procedure to manage emergency in the Project and should be reviewed at Site during work execution, if necessary.

2. SCOPE

This procedure is applicable to all activities in connection with the pre-commissioning, commissioning, start up and test of Project and shall include all company employees, subcontractors, visitors and others who may be affected by the project's activities.

3. DEFINITIONS

Within this review the following definitions shall apply:

Accident	Any unforeseen event causing an emergency
Crisis	An event or sequence of events of extreme concern or danger, able to disrupt the organization capability to re-conduct the situation under control with its own resources.
CLIENT	PTTLNG
CONTRACTOR	SPCC JV
PROJECT	Nong Fab LNG Receiving Terminal Project
Emergency	Event that causes a deviation from normal operating conditions, and such as to result in harm or potential harm to the health and safety of people, the environment and the PTTLNG's or third parties' assets. Emergency may result from human behaviours (terroristic attack, civil war, riots, demonstrations, sabotage, etc.), malfunctions or failure of machine or plant, technical event (ignition, explosion, short circuit, etc.) or natural events (earthquake, hurricane, etc.).
1st level Emergency (Minor case)	A minor emergency that can be effectively addressed locally using personnel and equipment available on site and/or to the Operating PTTLNG.
2nd level Emergency (Major case)	An emergency that can be addressed locally with the support of personnel and equipment made available by authorities and public administrations at peripheral level.
3rd level Emergency (Serious case)	An emergency which cannot be addressed locally and impacts the Site's and/or the Operating Company's operations and/or neighbor Industrials and/or Local community, requiring assistance/support and command by the relevant Corporate functions and/or authorities and public administrations of the province.
Emergency Response Team	Group of qualified personnel responsible for managing emergencies (fire, medical or rescue)
HSE Crisis Unit	The SPCC HSE Crisis Unit coordinates management of emergency situations level at SPCC Group level and is responsible for providing the necessary information to all interested parties.
Medical Emergency response Plan (Merp)	Procedure for dealing with medical emergencies and the necessary emergency response.
SECURITY OFFICER	The person at the security office who is responsible for responding to the emergency call and immediately activating the ERP.
SITE	Any place in the Project where the facilities will be reinstated, constructed and/or installed where SPCC JV can set HSE Standards and directly and enforce their application Site Boundaries.
Incident	An accidental event or chain of events that causes an emergency within the project context.
Medical Evacuation	Evacuation plan for medical emergencies.

4. ABBREVIATIONS

PTTLNG	PTTLNG	CM	Construction Manager
SPCC JV	SPCC-CTCI Joint Venture	COMM	Commissioning Manager
SET	Site Emergency Team	SO	Safety Officer
ERT	Emergency Response Team	PROJECT	NongFab LNG Receiving Terminal Project
ERTC	Emergency Response Team Coordinator	QHSE	Quality, Health, Safety, Environment
PHSEM	Project HSE Manager	ERP	Emergency Response Plan
HR	Human Resources	GS	General Service
HSE	Health, Safety, Environment	MEDEVAC	Medical Evacuation
SM	Site Manager	MERP	Medical Emergency Response Plan
IC	Incident Controller		

5. REFERENCE DOCUMENTS

5.1. Thailand National Laws

- National Environmental Quality Act BE 2535 (NEQA 1992)
- Ministerial Regulation on the Prescribing of Standard for Administration and Management of Occupational Safety, Health and Environment in relation to
- Hazardous Chemicals, B.E. 2556 (A.D. 2013), Fire Prevention and Control, B.E. 2555 (A.D. 2012), Machines.
- Ministerial Regulation on the prescribing of Standard for Administration and Management of Occupational Safety, Health and Environment B.E. 2552 (A.D. 2009)
- Safety, Occupational Hygiene and Workplace Environment Act B.E. 2554 (2011)
- Ministerial Order No. 123/2555 re: Appointment of OSH inspectors to under the OSH Act 2011.
- Notification of the Ministry of Labor concerning Specific Health Check-up for Employees Performing Works in relation to Chemical Risk Factors, B.E. 2552 (A.D. 2009)
- Ministerial Regulation on the Standard for Administration and Management of Safety, Occupational Health and Working Environment in Relation to Construction work year/ 2009
- Labor Announcement Regarding safety signs and safety symbol / year 2011
- Factory Act BE 2535 (1992)
- Public Health Act BE 2535 (1992)
- Hazardous Substances Act BE 2535 (1992)
- Oil Fuel Storage Act BE 2542 (1999)
- LPG Storage Act BE 2538-2450 (1995 - 1997)
- Fire Protection & Prevention Act BE 2542 (1999)

- Building Control Act BE 2522 - 1979/ Building Control Act No. 2 BE 2535 - 1992 and Associated Ministerial Regulations.
- Protective Measures for Operational Safety, Notification of Ministry of Industry No. 3 (BE 2542 - 1999) issued under the Factory Act.
- ARC (American Refugee Committee) Port Information and Marine Terminal Regulations NPC (National Petrochemical Corporation) Jetty Regulations.
- Notification of MSTE (Ministry of Science, Technology and Environment) Ref EPA.
- Standard for Determination of NOx, SOx and Particulate Emissions from Stationary Sources of Flue Gas dated 25/12/95.
- Energy Conservation Promotion Act BE 2535 (1992).

5.2. Codes and International Standards

- ISO 45001 - Occupational Health and Safety Management System
- ISO 14001 - Environmental Management System
- ISO 9001 - Quality Management System
- HSE documents issued by OSHA, the Occupational Safety and Health Administration (United States of America)
- Permitting required Documents
- National Fire Protection Association (NFPA) standards.

5.3. Project Reference Documentation

- 122018-SPCC-C-SH-PR-0037 HSE Manual for Commissioning
- 122018-SPCC-C-SH-PR-0001 Project SHE Plan
- 122018-SPCC-C-SH-PR-0002 SHE Procedures
- 122018-SPCC-C-SH-PR-0020 Project SHE Requirements for Subcontractors and Vendors
- 122018-SPCC-C-SH-PR-0005-Health Management Procedures and Planning
- 122018-SPCC-C-SH-PR-0014 Incident Notification and Investigation Procedure
- 122018-SPCC-C-SH-PR-0012 Medical Emergency Response Plan (MERP)
- 122018-SPCC-C-SH-PR-0025 Project Spill Contingency Plan
- 122018-SPCC-C-SH-PR-0040 Waste Management Plan for Comissioning

6. EMERGENCY CASES

Emergencies, based
on the nature of the triggering event, are classified in three main categories :

Operative: emergency due to carrying out of the site activities;

Natural: emergency due to event not related to the site activities and that cause and could cause harm to asset, health and safety of the personnel, environment or PTTLNG and CONTRACTOR reputation;

Security: emergency due to event not related to the site and that cause and could cause harm to asset, health and safety of the personnel, environment or CONTRACTOR reputation.

an event that seriously threatens the immediate and future safety, health and security of people, the environmental, property integrity or business function. Examples (but not an exhaustive list) of potential emergency situations are listed below:

- Medical emergency at site
- Medical evacuation
- Heavy storm (with lightning possibility)
- Industrial disruptor/dispute
- Multiple injury (combine of any of these)
- Fatality
- Death of a person by natural causes
- Emergency at neighboring facilities to the affected project area.
- Fire (class A/B/C)
- Explosions (e.g. Compressed gas cylinder)
- Spillage of oil, chemicals, or black water
- LNG spillage/leakage and Gas clouds
- Crane or Vehicle incidents
- Radiations incident
- Incident involving live power lines
- Jetty impact such as ship collision
- Disaster of Nature such as Earthquake, High wave
- Disease Outbreaks (extremely)
- Man Overboard from Jetty (extremely

Emergency and Crisis Scenarios should be developed on the basis of equipment and probability by a team under the leadership of the Emergency Management Manager (EMM) according to the template given in the relevant annex. Depending on severity of the accident, as result of a site incident, Site evacuation could be foreseen.

LEVEL 1	LEVEL 2	LEVEL 3

6.1. Emergency Levels

LEVEL 1 (Minor case): A minor emergency that can be effectively addressed locally using personnel and equipment available on site and/or to the Operating Company.

This includes, but is not limited to, the following:

- minor injuries to contractor or subcontractor personnel;
- damage to plant and/or equipment without significant harm to personnel, the environment, and/or public health;
- minor fire;
- manifestation
- small leak of dangerous chemicals
- Minor release of toxic or flammable gases
- Oil spill which can be dealt by local clean up resources

LEVEL 2 (Major case): An emergency that can be addressed locally with the support of personnel and equipment made available by authorities and public administrations at peripheral level.

This includes, but is not limited to, the following:

- fire with intervention of the fire-brigade;
- medical evacuation (MEDEVAC);
- local demonstration.

LEVEL 3 (Serious case): An emergency which cannot be addressed locally and impacts the Site's and/or the Operating Company's operations and/or neighbor Industrials and/or Local community, requiring assistance/support and command by the relevant Corporate functions and/or authorities and public administrations at central level.

This includes, but is not limited to, the following:

- serious social unrest that cause the repatriation;
- serious injuries to contractor or subcontractor personnel
- requiring MEDEVAC;
- contractor asset stoppage.
- A very serious event whose effects cause or may cause major impacts on the activities, health and safety of the employees and to the environment.
- A crisis/serious case is required the involvement of Crisis Management Team for the operational coordination of internal and external personnel and equipment available locally or provided by the relevant Corporate functions or by other group Companies.
- An event whose resolution can be extended over time.

Figure 1: Flow chart for Emergency level determination

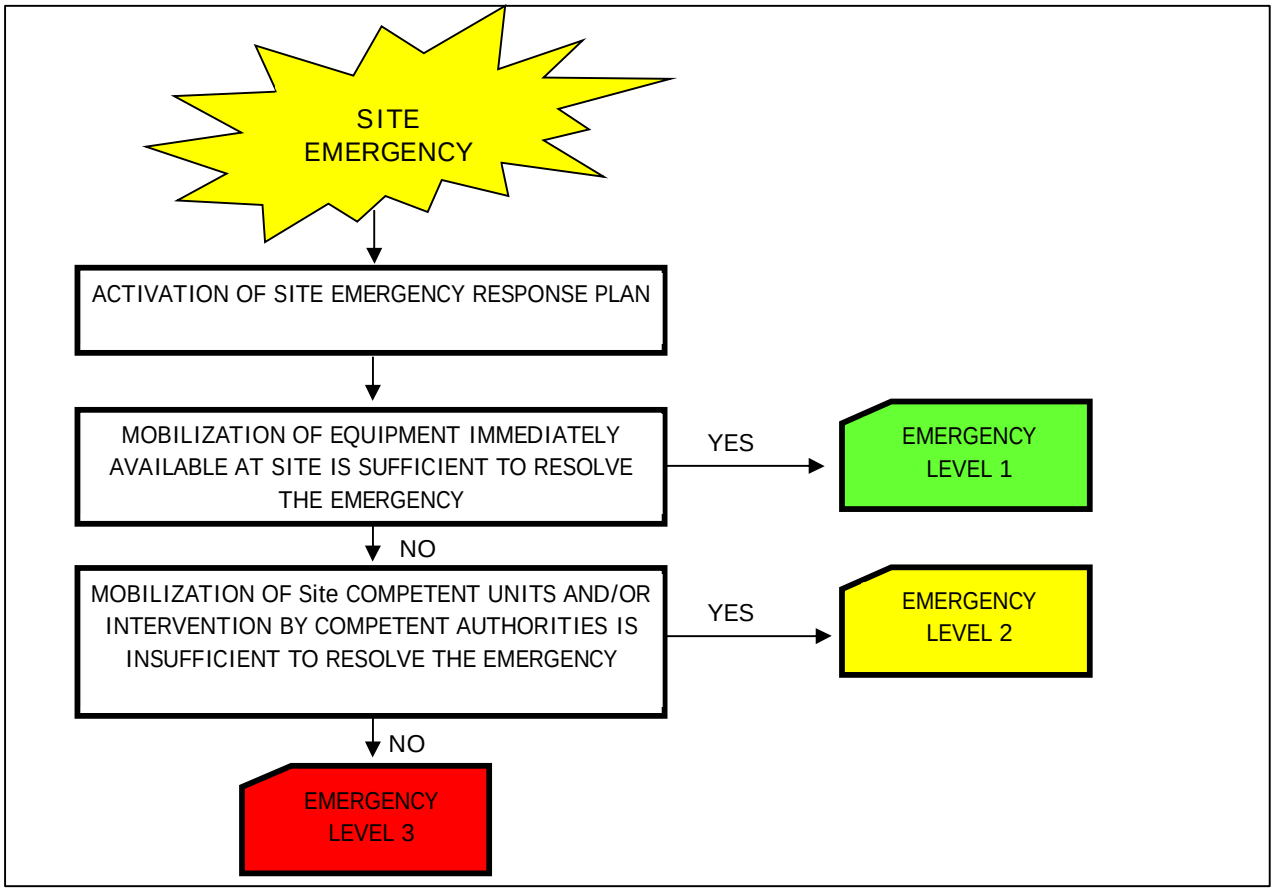

6.2. Pre-fire planning

Pre-fire planning is an important part of preparing for fire and provides emergency services with information about the property so a more efficient and effective operation can be conducted, meaning less damage to property and a better chance of a successful rescue. This document captures building characteristics, occupancy, protective features and hazards.

6.3. Spill Contingency Plan

A specific “122018-SPCC-C-SH-PR-0025 Project Spill Contingency Plan” which address the emergency response in case of environmental contamination has been developed. It details the response to spills of hazardous substances associated with project activities.

The Spill Contingency Plan is aimed to organize the control, alert and intervention systems which shall be in function, so as to avoid and, in case, reduce any potential pollution, refer to the Project Spill Contingency Plan.

6.4. Medical Emergency Response Plan (MERP)

In the event of a serious accident, illness, or any other medical emergency during the PROJECT Operations, reference should be made to Medical Emergency Response Plan refer to the Medical Emergency Response Plan (122018-SPCC-C-SH-PR-0012).

6.5. Security Plan

In case of a Security Emergency, the Security Team will be alerted. Specific actions shall be contained in the Security Plan, refer to the Security Plan (122018-SPCC-C-SH-PR-0029).

- As per project requirements and reasons related HSSE and/or Construction and/or Commissioning, it can be necessary to open new gates or to change the status of the mentioned gate. For any changes related to the gates SPCC will inform PTTLNG/PMC, Under any case all gates will be provided with security checks and personnel.

6.6. Lightning Policy

When the flash/bang count is at 15 seconds, supervision will suspend all crane work and elevated work activities.
When the flash/bang count is at 9 second or less, all activities will be suspended and the site will be cleared. All employees will report to sheltered place at site (buildings, trailers etc.), where a head count will be done as per the evacuation protocols and the proper notification will be made.
All work will remain suspended until the decision to return to work is reached by the CONTRACTORS's Construction manager together with the SUBCONTRACTORS representatives at site.

6.7 LNG spillage/leakage and Gas clouds

LNG is a cryogenic liquid and is stored and transported at approximately -260ºF (-160ºC) because cooling natural gas to this temperature turns it into a liquid and reduces its volume by a ration of 600:1 at which point its transport and storage is more economical. Contact with a cryogenic liquid can cause freeze burns and eye damage.

LNG is flammable in its vapor state between approximately 5 percent and 15 percent concentration of gas in air. LNG is less flammable than other fuels such as propane and gasoline and requires a higher ignition temperature (1004ºF). If a flammable vapor-air mixture from an LNG spill is ignited, it may result in a flash fire, which is a short-duration fire that burns the vapors already mixed with air in flammable concentrations. The flame front will burn back through the vapor cloud to the spill site, provided the vapor concentration along this path is high enough to continue burning. An unconfined methane-air mixture will burn slowly, tending to ignite combustible materials within the vapor cloud, whereas a confined methane-air mixture will produce fast flame speeds that tend to produce flash burns rather than self-sustaining combustion.

As a liquid, LNG will neither burn nor explode. Methane, the primary component of LNG, is colorless, odorless, and tasteless, and is classified as a simple asphyxiant for human exposure. LNG vaporizes rapidly when exposed to ambient heat sources such as water, producing 620 to 630 standard cubic feet of natural gas for each cubic foot of liquid.

When spilled onto water, LNG will initially produce a cold vapor cloud that is denser than air and will stay close to the water or ground. As this cloud mixes with air, it will warm up and cause dispersion into the atmosphere. If not ignited, the flammable vapor cloud could drift downwind until the effects of dispersion dilute the vapors below a flammable concentration. The downwind distance that flammable vapors might reach is a function of the volume of LNG spilled, the rate of the spill, and the prevailing weather conditions. Also, in order to disperse to significant downwind distances, a vapor cloud must avoid ignition. An event of sufficient magnitude to rupture an LNG cargo tank is likely to provide ignition sources. If a flammable cloud is ignited by the initiating event or by other ignition sources (e.g., on the ship, on other nearby vessels, or on shore), the flame will burn back to the vapor source, and the flammable cloud would not travel a significant distance over land.

Although LNG vapors can explode if ignited within a confined space, such as a building or structure, there is no evidence suggesting that LNG vapor is explosive when ignited in unconfined open areas.

LNG is less hazardous than liquefied petroleum gas (LPG) and liquefied ethylene, which have (1) higher specific gravities, (2) a greater tendency to form explosive vapor clouds, (3) lower minimum ignition energies (MIEs), and (4) higher fundamental burning velocities. LNG is not toxic, and it rapidly evaporates; therefore, long-term environmental impacts from a release are negligible if there is no ignition of natural gas vapors.

7. EMERGENCY RESPONSE ORGANIZATION, ROLES & RESPONSIBILITIES

7.1. General

Care for people lies at the heart of any emergency response; it does not include the immediate lifesaving activities, which are well provided for by the emergency services, but it does include meeting the essential needs of survivors when removed from danger.

The Emergency Response Plan will be implemented by means of the Contractor Emergency Response Team (ERT).

The purpose of the ERT is to take care of people before, during and after emergencies. The ERT has to be trained to response to all kind of credible emergencies and included in this procedure.
The ERT activities will ensure that:

The needs of people are the focus for both preparation and activity following an emergency;

- Care for people is reached effectively and timely;
- People's needs are met by those best able to fulfil them;
- People's essential personal needs are identified at all times;
- There is both a single point of access to all services and that services are delivered at the most suitable place;
- Care for people is integrated with other multi-disciplinary activities.

7.2. Organisation

Incident response on site will be implemented by the Site Emergency Team (SET). The SET will comprise a group which will direct emergency response and which will implement on-the-ground emergency response activities.
Site Emergency Team shall establish the Dress Code i.e. Reflective Jackets.

Emergency response team (ERT) will be arranged at site. Contractor SM will normally lead the team during emergency being the Emergency Management Manager (EMM), Emergency Response Team Coordinator (PHSEM) is appointed as deputy EMM if SM is not available and is responsible to keep the team updated and monitor for the application of this plan.

Site Emergency Team (SET) Table

Emergency Role	Fulfilled one of the following:	Managed by
Emergency Management Manager (EMM)	SM	CONTRACTOR
Incident Controller (IC)	G.S./CM/PRE-COMM/COMM	CONTRACTOR
Emergency Response Team Coordinator	PHSEM	CONTRACTOR
Emergency Response Team	Fire/Rescue/Medical Team	CONTRACTOR

The SET will gather in the designated Emergency Control Centre located in CONTRACTOR Site Office.
The Room will be clearly indicated and equipped with the following items:

- Copy of Emergency Response Plan;
- Spare Radio with charger;
- Hot line to the Emergency Control Centre;
- A dedicated line to guarantee 24 hours connection with the PTTLNG;
- Maps and plant lay-out;
- Emergency lighting.

A copy of the ERP will also be distributed to:

- PTTLNG, in order to facilitate the coordination between the different emergency team;
- All the above responding personnel (SET) and entities;
- SUBCONTRACTOR personnel which will be integral part of the SET, whenever required.

7.3. Responsibilities

The Site ERP will be implemented via the CONTRACTOR SET.
For the construction, pre-commissioning and commissioning activities, the SET will be composed by the following persons:

Emergency Management Manager (EMM): CONTRACTOR Project Manager for Construction or his delegate;

Emergency Response Team Coordinator (ERT Coordinator): CONTRACTOR Field HSE Manager or his delegate;

Incident Controller (IC): CONTRACTOR Construction Manager, Pre-Commissioning or Commissioning Manager and General Service.

Emergency Response Team: Fire brigade, Rescue Team, Security team, CSR team, Communication team, Mechanical/Electrical team, Support team and Medical Team.

In case of any emergency, every worker shall report incident directly to the HSE Officer if available in the nearby or will call the emergency number 098 881 87 00 (by phone) or Channel 49 (by radio).

The caller (HSE officer or any worker) shall provide as clearly as possible:

- Nature of the incident;
- Location of the incident;
- Caller's name and contracting Company;
- Caller's location & sublocation.

Caller shall not hang up the phone until instructed to what to do. It's everyone responsibility to report as soon as possible the emergency and be available at site to collaborate with ERT.

7.3.1. Emergency Management Manager (EMM)

The Emergency Management Manager shall be responsible for the overall direction of the emergency response strategy. He/she shall:

- Manage every emergency scenarios along with ERT Coordinator;
- Maintain contact during emergency with ERT Coordinator in order to properly response in case of specific necessity;
- Establish the extent of the incident and the type of support required;
- Ensure proper line of communication with CONTRACTOR Management and PTTLNG representative (as per flowchart);
- Ensure that safe escape routes and assembly points are properly identified;
- Ensure that this document will be revised, when necessary.
- Lead the Emergency and Crisis Scenarios developing team

The CONTRACTOR SM is the Emergency Management Manager and he shall appoint a competent person to carry out his duties and responsibilities in his absence.

7.3.2. Emergency Response Team Coordinator (PHSEM)

The PHSEM is the Coordinator of the Emergency Response Team; he shall:

- Manage every emergency scenarios along with EMM;
- Coordinate, manage and promptly activate the ERT, providing information about the kind of emergency in order to obtain an adequate response by Team;
- Provide information and advice concerning the health and safety aspects of the response activities;
- Ensure that ERT is provided with all the equipment necessary to adequately response in case of every emergency;
- Ensure that ERT is composed only by competent and trained personnel;
- Ensure that all the employee involved in the activities are informed about the procedure to follow in case of emergency;
- Assign for each assembly point a dedicate safety officer;
- Ensure that this document will be revised, when necessary.

CONTRACTOR PHSEM shall appoint a competent person to carry out his duties and responsibilities in his absence.

7.3.3. Incident Controller (IC)

The Incident Controller, acting as logistics coordinator shall:

- Maintain continuous contact with EMM and ERT Coordinator during emergency;
- Arrange for the provision of additional equipment such as cranes, forklift, etc. to support activities of the ERT;
- Ensure the availability of emergency escape vehicles (buses) and ambulance in appropriate number and at all times, for emergency evacuation.

7.3.4. Safety Officer (SO)

The Safety Office shall:

- Immediately inform ERT Coordinator about the emergency, specifying location and type of incident;
- Make an initial assessment of the severity of the incident;
- Maintain contact with the EMM and ERT Coordinator warn of potential for escalation of incident;
- On agreement with the EMM and ERT Coordinator, activate the Area Escape Alarm, thus ensuring that personnel escape to a safe assembly point away from the affected area;
- In the event of person missing, immediately inform EMM or ERT Coordinator in order to activate the search and rescue procedure.

7.3.5. Emergency Response Team

Emergency Response Teams shall be composed by competent and trained personnel include the fire fighting and/or rescue certified and shall promptly respond when activated by EMM. This team shall be composed by :

- Fire Fighting Team;
- Rescue Team;
- Medical Team.
- Security Team
- Support Team
- CSR Team
- Communication Team
- Mechanical/Electrical Team

- Muster point controller
- Environmental Team
- Etc.

ERT will be composed by the following persons:

- SM
- PHSEM
- Contractor Construction Manager
- Contractor Commissioning Manager
- Nurses
- Client HSE representatives
- Subcontractor PM
- Subcontractor HSEM
- HSE Supervisor/officers
- First Aiders
- Fire Wardens

- ERT shall check that emergency equipment are always in good condition, properly maintained and available in case of necessity.
- ERT shall involve adequate number of employee (HSE supervisor/officer) that during emergency shall guide workforce to dedicated Assembly Point.
- ERT shall be available 24 hours per day, in order to properly response in case of emergency.
- The ratio of First Aider to workers shall be minimum 1:20
- Fire wardens shall be enough to quickly guarantee a suitable action in case of fire.
- List of names and contact numbers of ERT will be shared among the team and clearly posted on site communication boards.
- ERT will be constantly updated by PHSEM on revision of every emergency plan, result of drills and any main event potentially involving emergency actions.
- ERT will be activated and coordinated by EMM, all ERT members will actively participate and be available during any eventual emergency.

Organization Chart of Emergency Response Team

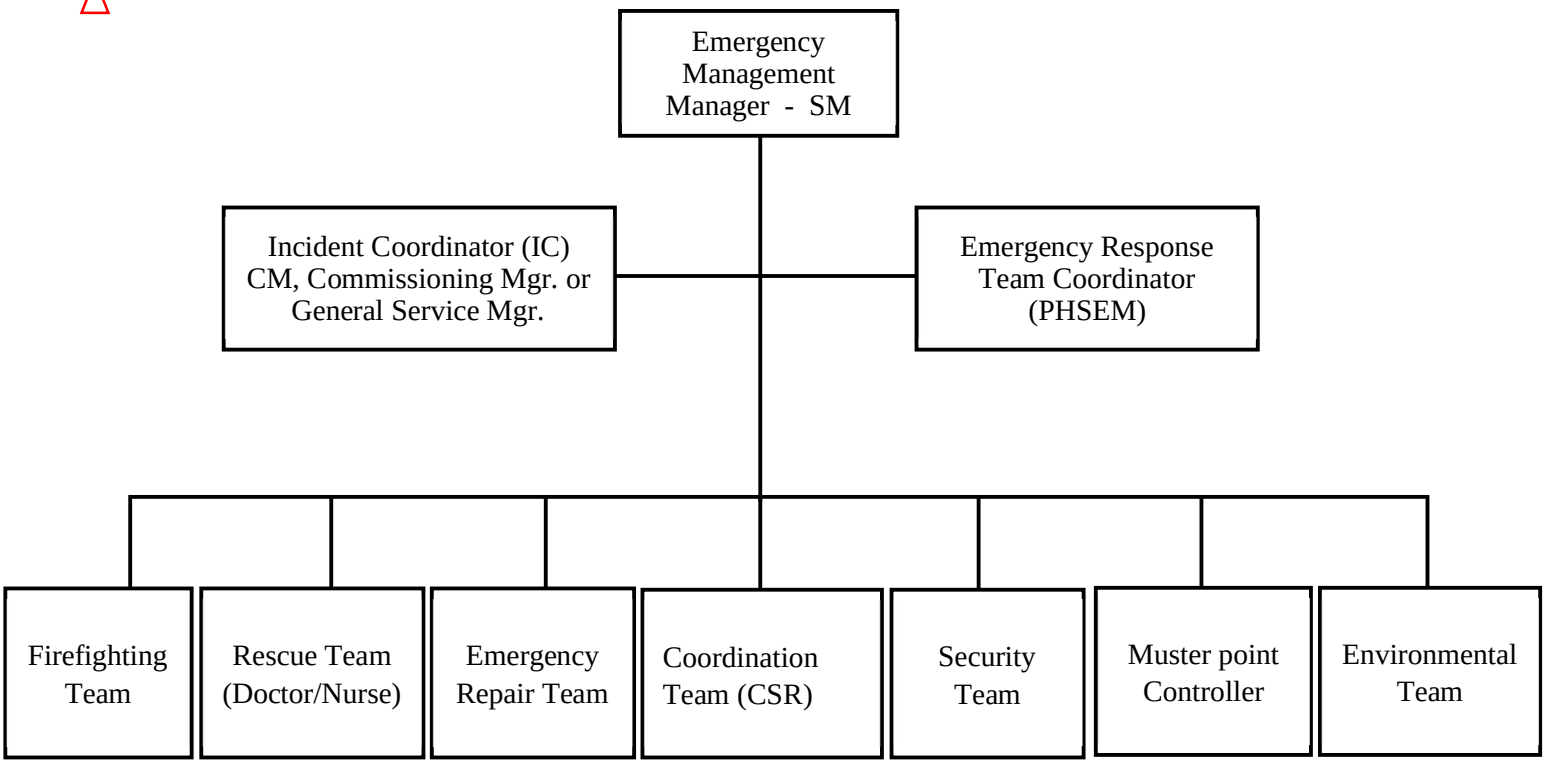

7.3.6. Employee/Worker

Each person who, once an emergency situation is detected, shall immediately inform the SO and/or supervisor of the area in order to start the emergency response process.

7.3.7. Visitors

Visitors shall be inducted on the Emergency Procedure in place and Emergency contact.

7.3.8. Interface with Client

Contractor issued Emergency and Crisis Management Plan and Client follows this plan in order to identify, study, forecast crisis issues, and implement specific actions and elements to respond or control any such crisis. Client is responsible to ensure availability at site of medical equipment and ambulances fully working and ready to be used in case of emergency.

In case of an emergency which cannot be effectively managed by JV at local level (Emergency Level 2 and Level 3), JV EMM shall inform Client Crisis manager in order to activate JV emergency procedures and to coordinate the different structures.
Otherwise in case of an Emergency Level 1, Client shall be informed about the emergency, the follow-up of corrective actions and the investigation.
The presence of monitoring devices is particularly important in close to the existing sump considering the possible discharge of hazardous gases. Client will ensure permanent gas detectors provided.

In case of an emergency from Client, it is Client representatives responsibility to communicate immediately (Radio / Telephone etc.) to Site PM and PHSEM the event.
This scenario will be considered as a major emergency scenario and will be managed as hereafter described.
All site project personnel will stop all kind of activities and will meet in muster point, waiting for communication of next action.

7.3.9. Interface with Subcontractors

Each Subcontractor shall prepare for its own working area an Emergency Response Plan for minor emergency of level 1 and is responsible for its application and implementation.
Each Subcontractor shall explain the content of its own ERP to all personnel at site before starting any new working activity, as well as ensure that a copy of its own ERP is made available at each working site (including offices).
The PHSEM is responsible to verify the compliance of Subcontractors' ERP with the present document.
The SM and PHSEM are responsible for ensuring efficient communication with the key staff of Subcontractors.

ERP Drills shall be conducted also with Subcontractors participation in order to verify the communication systems and to avoid possible interferences.

It is responsibility of all Subcontractors to be fully conversant with the present ERP and to ensure that this document is circulated through their own emergency organization and Line Management.

8. MANAGEMENT OF EMERGENCY RESPONSE

8.1. General

Contractor shall provide and maintain an Emergency Response System to ensure that any emergencies that occur during construction are responded to in an expedient manner with the capability to preserve live property.

8.2. Declared Emergency

An “emergency response” may be initiated and declared by any person who becomes aware of an event that may have any or all of the following consequences:

- Has caused or threatens to cause fatalities or serious injury;
- Has caused or threatens to cause major damage or loss of asset;
- Poses the threat of injury /damage to third parties;
- Has caused or threatens to cause damage or seriously affect the environment;
- Sounded an electrical/hand siren.
- Call the hotline

Any Contractor employee or any other person on Site becoming aware of the need for a declared emergency shall “raise the alarm” and declare an emergency response.

8.3. Emergency Level 1

In the event of an emergency classified as Level 1, all of the following actions must be carried out by those responsible:

- The company units concerned, managerial and support, shall activate all actions aimed to manage the emergency effectively at local level with the resources on site;
- The PHSEM establishes all necessary communication channels with the SPCC JV HSE Crisis Unit;
- The Site Project Manager establishes all necessary communication, following the Company Standards, guidelines and Client regulations.

8.4. Emergency Level 2

In the event an emergency classified as Level 2, all of the following actions aimed at establishing the appropriate communication channels and emergency response procedures must be carried out by those responsible:

- The PHSEM establishes the necessary communication channels with the HSE Crisis Unit;
- The competent member of the Crisis Unit ensures all necessary operational assistance is provided and, if necessary, mobilizes emergency services (for example, organization of medical evacuations, environmental emergency response interventions, etc.);
- The competent member of the Crisis Unit keeps the SPCC JV HSE Crisis Unit Leader and Deputy informed of the event and the progress made;
- The SPCC JV HSE Crisis Unit Leader and Deputy assess, according to their respective competence, whether any further resources (human, economic or technical, with the involvement of other company units) should be provided to the SM affected by the emergency, in order to ensure an effective response to the emergency;

- The SM affected by the emergency provides (either directly or through the SPCC JV HSE Crisis Unit) the necessary information to the Owner Representative, which, in collaboration with the Public Relations Units of Client., handles media relations.

8.5. Emergency Level 3

In the event of an emergency classified as Level 3, all of the following must be carried out by those responsible:

- The PHSEM coordinate with the relevant Corporate functions and/or authorities and public administrations of the Province to assist/supported and commanded
- The PHSEM establishes the necessary communication channels with the Corporate SPCC HSE Crisis Unit;
- The competent member of the Crisis Unit ensures all necessary operational assistance is provided and, if necessary, mobilizes emergency services (for example, organization of medical evacuations, environmental emergency response interventions, etc.);
- The competent member of the Crisis Unit keeps the SPCC JV HSE Crisis Unit Leader and Deputy informed of the event and its developments;
- The SPCC JV HSE Crisis Unit Leader and Deputy assess, according to their respective competence, whether any further resources (human, economic or technical, with the involvement of other company units) should be provided to the SM affected by the emergency, in order to ensure an effective response to the emergency;
- The SPCC JV HSE Crisis Unit Leader and Deputy contact the Client Crisis Unit to arrange the appropriate assistance required.

8.6. Alarm System

When an emergency has to be declared, the following shall be used for raising the alarm using the PA/ GA alarm system and /or manual siren and/or two-way radio (explosion-proof type (Ex)):

- Person raising the alarm to clearly state the words “EMERGENCY – EMERGENCY – EMERGENCY”;
- Security Officer will acknowledge the receipt of the alarm call;
    - Person raising the alarm will clearly state:
    - The name and the precise location of the emergency response incident;
    - The nature of the emergency event (fire, vehicle accident, fall, person trapped in, etc.);
    - The number of persons injured;
    - Severity of injures (if obvious, e.g. broken leg, spinal injury, head injury, etc.);
    - The need for any special rescue or recovery equipment;
    - Prevailing weather conditions or any other pertinent information.

People in charge of Emergency Response and/or specific reference number are defined in the specific sections, enclosed into the document. In general the ERP face the following scenarios:

- Medical Emergency
- Fire Emergency;
- Environmental emergency

The ERTC shall repeat and confirm the nature of the information for clarification.

Person raising the alarm to clarify or correct the information and then to stand-by on the radio for further instructions from the ERTC, unless required to render immediate assistance to injured persons.

ERTC shall then follow the emergency response activation and callout process.

In case of emergency the workers shall receive instruction from the PHSEM, by means of their Safety Officer and/or Supervisors, if the alarm is relevant to their location.

△ Upon hearing the Emergency Evacuation Alarm Activating, all personnel shall proceed in an orderly manner to the nearest safe Contractor muster point and await further instructions.

8.7. Emergency Instructions

In case of Emergency siren all personnel shall immediately move to designated Emergency muster point.

ERTC broadcasts over, phone, radio network and amplification system that there is:

- State of emergency declared;
- Emergency Number or channel
- Site Emergency Response Alarm activated;
- Radio silence to be implemented and maintained except for emergency radio traffic: messages to be brief and to the point;
- ERT personnel are to ensure that messages are understood by the receiver and acted upon;
- ERTC ensure the arrival of ambulance with doctor and nurse to the scene of incident;
- Site Emergency Response Team members consult their checklist and carry out duties as assigned;
- Office Administration staff are briefed on the incident and shall assist where and when instructed to do so.

8.8. Fire, Explosive **LNG spillage/leakage and Gas clouds** Accident

A person becoming aware of a fire emergency situation shall:

- It has to directly call the Emergency Hotline Number
- If trained extinguishing the fire only use nearby fire extinguisher if the fire is small enough; do not fight the fire if this is spreading rapidly and initiate a fire alert by reporting the emergency to the designated Safety Officer;
- Then follow the procedure reported in this document for this case.
- The number of Firefighting Team and Standby Fire Suite shall be identify on the Pre-Fire Plan for commissioning.

In case of fire; the worker shall report incident directly to the Safety Officer that shall report directly to the ERT by radio and/or verbal and provide as clearly as possible:

- Nature of the incident;
- Location of the incident;
- Caller's name and contracting Company;
- Caller's location & sublocation.

Personnel Instruction:

At the activation of a local fire alarm, the personnel shall:

- Stop all work at once;
- Shut down and make safe all equipment;
- Vacate the work place, proceed in an orderly way to the nearest muster point and wait for instructions;
- At the muster point a roll call is taken by foreman and all the personnel are accounted for, awaiting further instructions;
- Do not return to work until a notification has been received from ERT by means the Safety Officer.

8.9. Environmental Emergency

Contractor establishes, implements and maintains the procedures to identify potential emergency situations and potential accidents that can have impacts on the environment and how it will respond to them.

In this way Contractor shall respond to actual emergency situations and accidents and prevent or mitigate associated adverse environmental impacts.

The possible scenarios identified as Environmental Emergency are:

- Spill or Sewage System failure;
- Waste Accumulation.

Spills definition and classification, identification of potentially polluting substances pollution scenarios, emergency response actions and spill prevention strategies are described into the Project Document “122018-SPCC-C-SH-PR-0025 Project Spill Contingency Plan”

Waste segregation and disposal strategy in order to reduce any possible environmental emergency are presented in the Project Document “122018-SPCC-C-SH-PR-0040 Waste Management Plan for Comissioning”.

Please refer to the above document for any detailed information.

The number of Chemical & Spill Kits including ERT shall comply with the minimum Project requirement.

8.10. Other General Emergency

In case of other kind of emergency (i.e. road accident):

- Communicate the emergency calling the Safety Officer;
- Do not block or obstruct the emergency operations;
- Do not disturb the accident scene;
- Wait until the PHSEM or Construction Manager arrives on site if safe to do so.

8.10.1. Security Personnel

During any emergency situation, security personnel shall be immediately informed and will:

- Guard the gate (for avoid any entry from unauthorised outsiders and to promptly open in case of evacuation);
- Ensure that the roads are clear for emergency vehicles;

- Prevent any person or vehicle not authorised from entering in the incident area.

Only authorised Emergency Service, HSE Staff and Project Staff will be allowed into the site incident area.

8.10.2.Site Access & Egress

In the event of a Site closure resulting from an emergency event, vehicles remaining on Site shall be parked and secured in such a manner to avoid obstruction to any emergency response action or personnel. Keys should be left in the ignition in case ERT has to remove them

- The access/egress shall provide the security guard control and the Emergency Evacuation exit route in the commissioning area shall designate to be safe places up to the emergency situation and wind direction.

8.11. Communication

Any worker at the Project can activate the emergency procedure. In case of emergency, the persons shall receive instructions from SET to proceed to the assembly points.
This will be done by radio (or walky-talky) or by alarm system. Alarm system has to be defined; for siren system shall be defined the siren tone (e.g. continuous sound for fire emergency, intermittent sound for medical emergency, etc.). Upon receiving the instructions, all personnel shall proceed in an orderly manner to the nearest Assembly Point and await further instructions.

- The kind of siren tone shall estimate and communicate to the concerned person by the training program and Project ID badge.

Declaring as follow:

- Who is calling
- Exact location of the accident;
- Nature of the accident;
- Number of persons involved;
- Short description of their condition;
- If there may be need for special medical equipment;
- Other relevant information.
- Do not hang up until instructed to do so. You may be required to assist or guide
- CONFIRM MESSAGE IS UNDERSTOOD;

Communication flow as follow:

- In the event of a medical emergency occurring at Project, the person identifying the situation shall immediately activate the medical emergency procedure by identified communication lines or by sending someone for help.
- The Hotline Officer shall answer the call and you shall be required to provide information to him.
- After ensuring that all details have been accurately recorded, the Hotline Officer shall immediately, notify relevant response parties.

- The Hotline Officer shall record all the details on the emergency response log to provide accurate details of the emergency and any injuries to the nurse/medical centre.
- The Security Officer shall immediately contact with Project HSE Manager.
- The Area manager and ERT members shall proceed to the emergency scene and provide assistance as required.
- The person, who has reported the incident, if competent, should assist where possible to manage the emergency situation until assistance arrives.
- Until the normal response team are operating the initial response will generally be coordinated by trained field personnel.

8.12. Actuation

An emergency situation occurring inside the project area shall be managed according to this Emergency Response plan.

Typically the following tasks/roles shall be put in place in the event of a declared emergency response:

- State of emergency declared;
- Contact people in charge of Emergency Response (Emergency Number or channel, ERT or its foreman/Supervisor)
- Radio silence put in place on project radio channels;
- Ambulance, Doctor and Nurse dispatched to the scene of incident;
- In case of fire, fire extinguishers are provided along the Site during the working shift by subcontractors;
- First Aid / medical centre manned if required;
- Emergency Response Team reports to emergency response control room and consults his checklist;
- Client Site Representatives are briefed on the incident and shall assist where and when instructed to do so by ERTC;
- Emergency Evacuation Plan, which shall include a list of all personnel on Site;

9. MEDICAL EMERGENCY RESPONSE PLAN (MERP)

9.1. Risk Management

Risk Management is a critical component of the Medical Emergency Response Plan. It is mandatory that all personnel who respond in a emergency situation ensure that the hazards are identified and that associated risk are controlled to an acceptable level.

In a situation where the risk associated with the planned response is unacceptable then all personnel shall be immediately withdrawn to a safe place. The person in charge shall then develop a suitable plan before the response is reactivated. This plan shall be documented on a risk assessment form.

Risk assessment strategies and processes shall be implemented to ensure the safety of all personnel. These processes include:

- The recovery / rescue of people
- The securing of an incident scene
- The normalization of an incident area
- The ongoing security of an incident scene
- All re-enactments of an incident

The identification of hazards and the management and control of the risk associated with these hazards will be in accordance with the current policies, procedure and health and safety requirements detailed in the Project HSE Plans.

The Project MERP shall be tested by scheduling a minimum of one exercises per month. These can consist of a desktop system analysis as well as comprehensive emergency exercise.

To ensure the reliability of emergency response equipment it shall be inspected on a regular basis.
For the Ambulance inspection shall be daily.
The respective owners are responsible for keeping equipment in operational condition. (All emergency reponse equipment should be considered critical)

9.2. Medevac Exercise

A medical emergency is a situation in which, due to illness or an accident, there is the danger of losing a limb, an organ or life. In order to face possible emergencies, an evacuation plan is prepared for each WORKSITE / vessel involved in the project. A MEDEVAC has priority over normal operations.
The plan is prepared in collaboration with the Client and considers specific needs for the working activity that will be performed and the general situation of the country in which working activities are carried out.
In any case, medical emergencies require timely clinical and surgical intervention capabilities, such as:

- Immediate intervention;
- Operational unit, adequately trained people to perform first aid interventions.
- First-aid team members are easily identified, by means of a badge or other particular identification sign. Their names and, if possible, their photographs are posted on the main notice board of the workshop, WORKSITE or the vessel concerned.

In case an Offshore MEDEVAC is necessary for SUBCONTRACTOR, relevant SUBCONTRACTOR responsible onboard shall liaise with his employer ensuring a prompt response onshore according with SUBCONTRACTOR emergency response plan. All SUBCONTRACTORS emergency contacts list shall be available onboard.
The resources to make available will be Medical team in the different WORKSITES, the roads are related to the location and the condition of the traffic at the time of the emergency case.
Normally the Injured Person is to be taken to the WORKSITE first aid/clinic, to one of the Hospitals to be defined by the Health Coordinator/Doctor who treats the Injured Person in accordance with the Injured Person and the Injured Person organization.

In each medical emergency, it is necessary to utilize the most suitable means of transport available.

After the first aid by site Nurse / Doctor or competent person, the patient should be transported to the onsite first aid/clinic for further assessment and stabilization by ambulance or other appropriate means of transport to the nearest local specialized hospital.

If repatriation is needed for CONTRACTOR's employee, the Country Health Coordinator in collaboration with Hospital's Doctors and Business Unit Offshore Health Manager will evaluate the means of repatriation case by case.

In order to evaluate the level of readiness/preparedness of the operating unit in the event of medical emergency, and to identify any weak links in the medical evacuation chain, specific drills shall be carried out periodically according to the MERP.

10. NOTIFICATION AND REPORTING

At the end of an emergency, Emergency Management Manager, supported by the PHSEM, shall prepare a detailed report to Site Project Manager and to be forward to Client Project Representative (than the report can be sent to local authority if needed).

The report shall include, at least:

- Location and time of emergency;
- Person involved;
- Equipment involved;
- Neighbouring plants involved;
- Root Cause's;
- Actions undertaken during the emergency;
- Actions undertaken after the emergency.

The forms to be used to carry out the investigation after an emergency and to ensure that proper follow-up is performed is the "122018-SPCC-C-SH-PR-0014 Incident Notification and Investigation Procedure", which is also reported in Attachment 2,3,4.

11. TRAINING

Mandatory training sessions shall include at least:

- Contractor Orientation and Induction (for new personnel, at arrival on site);
- Regular meetings to explain and understand the emergency procedures (for all personnel, periodically during construction activities).

Training sessions for Contractor personnel will be documented by the PHSEM. The PHSEM shall train the ERT members.

ERT members and crews will be formed and trained in accordance with the following list:

Training for each ERT member in handling anticipated emergencies that could reasonably be expected to occur;

- Training for all Site personnel in the Contractor's and Subcontractors' ERP;
- Training for all Site personnel in the Contractor's and Subcontractors' evacuation procedures;

- Individual members of ERT will be trained and competencies assessed for their roles and responsibilities;
- Training plans will be developed for the individual roles based on an analysis of the skill and competencies for the roles and responsibilities of ERT personnel;
- Record of emergency response training will be main tended on file;
- Teams will be retrained on a needs basis and after any revision or changes to the present ERP.

The specific trainings foreseen for the ERT are:

- Fire fighting
- First Aid
- Rescue at Height
- Rescue in confined Space
- HAZMAT (HAZardous MATerial)
- Other specific trainings (if necessary according to activity and risk assessment)

In addition to the abovementioned specific training, each operator and other key personnel (such Security officer) shall receive a dedicated training on the content of this Plan.

Subcontractors HSE Manager shall ensure training sessions for their personnel to familiarize them with the Emergency Response Plan. This training session shall be documented and the minute of meeting will be send to the PHSEM.

12. EMERGENCY PREPAREDNESS

12.1. Emergency Facilities

Fire Fighting Facilities

Gas Plant is equipped with firefighting system to manage fire emergency situations. For details regarding system configuration refer to technical documentation (Ref. from [5] to [12]).

First Aid Facilities

Project clinics for providing first aid services to all personnel will be provided with all the medical equipment necessary; adequate number of nurses and ambulances with driver and a qualified nurse will be provided and will be available 24 hours per day.

- First Aid Facilities and the number of the Emergency equipment shall comply with the minimum Project requirement.

The First Aid Kits shall be reviewed periodically by the subcontractor medical staff in accordance with the number of employees and the relevant medical needs. After using the First Aid Kit, the medical staff shall ensure that First Aid Kit is re-furnished and available.

Urgent cases will be evacuated to the Hospital.

Confined space and work at height rescue

A dedicated mobile equipment equipped with confined space rescue facilities (tripods, SCBA, etc.) and work at height rescue facilities (harnesses, ropes, pulleys, etc.) must be constantly available at side by subcontractor.

Oil Spill Facilities

Spill Kit oil and chemical spill emergency must be available at site.

- The number of Chemical & Spill Kits including ERT shall comply with the minimum Project requirement.

Wind Socks

Enough number of wind socks are located in different location of the project in order to guarantee visibility from all location. In case of gas release, all personnel must go toward the nearest Emergency Assembly Muster Point moving perpendicularly wind direction. Only in case leak location is clearly known, evacuation in opposite wind direction is allowed.

- Wind sock installation shall be marked on the plot plan layout put on the Pre-Fire Plan for commissioning.

12.2. Emergency Rooms

To proper manage and organize emergency responses 2 different Emergency Control Room (ECR) shall be provided located:

ECR No.	Located in	Main Function	Equipped with
1	Control Room	Coordinate FERT during any emergency	1. Local radios (explosion-proof type (Ex)) 2. Dedicated line to the CMR 3. Clocks 4. Emergency log sheet book for writing down events 5. Suitable PPE, SCBA sets, Emergency equipment, escape masks (Ref. from [5] to [12]). 6. Emergency contact list (refer to APPENDIX 1 - Emergency Contact Numbers) 7. Station Bill (Instruction and ERT composition) 8. PAGA system
2	Project Operations Building	• Meeting room for Management Level of ERT • Coordinate response for major emergency (level 2 and 3) establishing a direct communication line with ECR No. 1 and with external authorities.	1. International and local communications (Satellite Phone, Internet) 2. Radios, fax machine, VHF radio 3. PC and printer (connected to Site Access Control System) 4. Status board for writing down events 5. Clock 6. Plans and maps of the Site 7. Office supplies (pens, pencils, paper etc.) 8. Map of country and region 9. Telephone directory 10. Email 11. Documentation, including ERP 12. Visio-conference

			13. CCTV shall comply with the minimum Project requirement

12.3. Emergency PPE (Special)

Specific PPE will be provided to ERT to perform their functions. A non-exhaustive list of such PPE is reported below:

- SCBA
- HAZMAT response suits
- Cryogenic gloves, apron, faceshield
- Firefighting Suits
- Medical faceshield, mask, gloves
- Working at height rescue gear
- Confined space rescue equipments
- The number of Emergency Special PPE shall comply with the minimum Project requirement

13. EMERGENCY DRILLS

ERP Drills shall be conducted also with Subcontractors participation in order to verify the communication systems and to avoid possible interferences. Client HSE Representative will be informed about the schedule of these drills.

PHSEM on site will simulate emergency preparations with at least one exercise per month according to the project procedures, and one fire drill, one evacuation drill and one environmental drill per year according to local laws. Simulations can be perform separately or combined.

- Medical emergency
- Fire/Explosion & Evacuation
- Spillage/leakage and Gas clouds

ERT Coordinator shall supervise the Emergency Drills and shall prepare a report to summarize the findings and evaluate possible actions to improve the method/operations. The report shall be shared with CONTRACTOR organization. The schedule shall consider new workers and SUBCONTRACTOR arrival on the project in order to include them in the drills. Emergency drills shall cover all foreseen scenarios as identified in the present Plan and updated on needs.
All personnel are to be trained in the proper techniques and routes for evacuating the site in an emergency including the designated gathering points and head counts to account for all personnel.

14. EMERGENCY SYSTEM TESTING

Once per week, as agreed with Client, the following shall be tested:

- Radio and mobile telephone communication between Contractor and Subcontractors,
- Emergency Center;
- Emergency mobile telephones;
- Hand sirens;
- Megaphones.

The hand siren test shall be conducted after personnel have been advised by megaphone or verbally by the PHSEM.
The following message shall be communicated: “Siren test shall commence shortly – all personnel shall continue to work”.
This message shall be repeated three times.
The siren shall be sounded once for 30 seconds continuously to test the system.

The PHSEM shall ensure that the alarm system (e.g.: hand siren, etc.) of Contractor and subcontractor are maintained as requested by the constructor, inspected and always available.

In case of an operational problem with the local alarm, all the activities in the area not covered by the alarm will be suspended. Activities will not be allowed to restart until the system is fully restored or replaced.
The decision about day and timing of Emergency System Testing will be agreed at Site; it is advised to establish a fixed day to schedule these tests.

15. REVIEW

As already said in Section 1, the present document is a living document and should be reviewed at Site before work commences and/or during work execution, if deemed necessary.
The review can be part of an audit, a change in policy and/or procedures, or a change in circumstances related to the project.

Resources requirements will be reviewed concurrently with any review of the ERP or when the status of current resources changes.
After each ERP revision, employees will be re-trained accordingly.

Note: Emergency Routes and Muster Points time by time will be established at Site and then communicated through weekly meeting to better follow the project development.

16. APPENDIX 1 - Emergency Contact Numbers

17. APPENDIX 2 – Assembly Points for Evacuation at Project

18. APPENDIX 3 – Emergency Management Flow Chart

19. APPENDIX 4 - Emergency Drill Form

20. APPENDIX 5 - Emergency and Crisis Scenarios

APPENDIX 1 - HOTLINE

098 881 87 00

CONTRACTOR OFFICE CONTACT NUMBERS

PTTLNG and PMC Site Representative to be notified

POSITION	NAME	PHONE NUMBER
[redacted]		

SPCC Site Representative to be notified

POSITION	NAME	PHONE NUMBER
[redacted]		

CONTRACTOR SITE EMERGENCY TEAM

ROLE	*NAME*	JOB POSITION	MOBILE
[redacted]			

[redacted]

NOTED* SUBCONTRACTOR(S) SITE EMERGENCY TEAM WILL BE SUPPORTED

EXTERNAL/PUBLIC SITE EMERGENCY CONTACT NUMBERS

Name **ชื่อหน่วยงาน**	Name **หมายเลขโทรศัพท์**	Name **สถานที่ตั้ง**
แจ้งเหตุฉุกเฉินในโครงการ (สายด่วน) Emergency Hotline	098-881-8700	พื้นที่ก่อสร้างโครงการท่าเทียบเรือฯ ซ.โรงปูย ต.มาบตาพุด อ.เมืองระยอง จ.ระยอง
PTTLNG CCR Terminal-1	038-978-266 to 7	นิคมอุตสาหกรรมมาบตาพุด ถ. ไอ-แปด ต. มาบตาพุด อ. เมืองระยอง ระยอง 21150
โรงพยาบาลเฉลิมเกียรติสมเด็จพระเทพรัตนราชสุดาสยามบรมราชกุมารี (Maptaphut Hospital)	038-684 444	111 ถ.สุขุมวิท ต.ห้วยโป่ง อ.เมือง จ. ระยอง 21150
โรงพยาบาลระยอง Rayong Hospital	038-611104	123/19-20 ถ. สุขุมวิท ต. เชิงเนิน อ. เมือง ระยอง ระยอง 21000
โรงพยาบาลมงกุฎระยอง Mongkut Rayong Hospital	038-682-036	55/5 ถ. มาบยา ต. มาบตาพุด อ. เมือง ระยอง 21000
โรงพยาบาลส่งเสริมสุขภาพตำบลมาบตาพุด Maptaphut Sub-District Health Promotion Hospital	038-608-614	149/1 ม. 7 ต. มาบตาพุด อ. เมืองระยอง 21150
โรงพยาบาลบ้านฉาง Ban Chang Hospital	038-603 838	77 หมู่ 1 ถ.สุขุมวิท ตำบล พลา อำเภอบ้านฉาง ระยอง 21130
เอ เมดิคอล การแพทย์ A Medical clinic	084-798-1147	ถ. มาบตาพุด-หาดทรายทอง ต. มาบตาพุด อ. เมืองระยอง 21150
คลีนิคหมอภัทร ระยอง Dr. Phat clinic	061-594-5153	11 ซอยโสภณ 8 ถ. วัดโสภณ-มาบตาพุด ต. มาบตาพุด อ. เมืองระยอง 21150
สถานีตำรวจภูธร มาบตาพุด Police Station - Maptaphut	038-607-111	ถ. วัดโสภณ-มาบตาพุด ต. มาบตาพุด อ. เมืองระยอง 21150
สถานีตำรวจภูธร ห้วยโป่ง Police Station - Huaypong	038-683-111	
สถานีตำรวจภูธร บ้านฉาง Police Station - Banchang	038-601-111	ถ. สุขุมวิท ต. บ้านฉาง อ. บ้านฉาง ระยอง 21130
สถานีดับเพลิงมาบตาพุด Fire Station - Maptaphut	038-611-145	เทศบาลมาบตาพุด
สถานีดับเพลิงมาบข่า Fire Station - Mapkha	038-636-438	
สถานีดับเพลิงบ้านฉาง Fire Station - Banchang	038-695-271 038-695-271	ต. บ้านฉาง อ. บ้านฉาง ระยอง 21130 ต. บ้านฉาง อ. บ้านฉาง ระยอง 21130
NPC Safety and Environmental Service Co., Ltd.	038-977-777	20/9 ถ. ปกรณ์สงเคราะห์ราษฎร์ ต. มาบตาพุด อ. เมืองระยอง ระยอง 21130
สนง. ป้องกันและบรรเทาสาธารณภัย ระยอง Rayong Disaster Prevention	038-694-134	ต. เชิงเนิน อ. เมืองระยอง ระยอง 21130
สำนักงานแรงงานจังหวัดระยอง Rayong labor Dept.	038-694-020 to 1	ศูนย์ราชการจังหวัดระยอง ชั้น 2 ต. มาบตาพุด อ. เมืองระยอง ระยอง 21150
สำนักงานสวัสดิการและคุ้มครองแรงงาน ระยอง Department of labor protection and welfare Rayong	038-694-117 to 9	ศูนย์ราชการจังหวัดระยอง ชั้น 2 ต. มาบตาพุด อ. เมืองระยอง ระยอง 21150
การนิคมอุตสาหกรรมมาบตาพุด Industrial Estate Authority of Thailand (IEAT)	038-683-942, 038-683-127 to 9	การนิคมอุตสาหกรรมมาบตาพุด ต. มาบตาพุด อ. เมืองระยอง ระยอง 21150
สำนักงานกรมเจ้าท่า (สาขา 6) Marine Department (MO 6)	038-687-458	ห้วยโป่ง

ตำรวจน้ำ Marine Police	038-437-056	

HOSPITAL CONTACT INFORMATION

NAME	ADDRESS	PHONE NUMBER
Memorial Hospita Sirindhor *(Primary evacuation hospital for life threatening cases)*	111 Sukhumvit Rd, Huai Pong , Muang Rayong District, Chang Wat Rayong 21150, Thailand	+66(0)38 684 444 / +66(0)819226248 / 1669 (Local call) https://www.hrh.go.th
Bangkok Hospital in Rayong *(Primary Evacuation Hospital)*	8 Moo 2Sangjanneramit Road, T.Noen-Phra, A.Muang, Rayong 21000, Thailand	+66 (0)38 921 999 / +66 (0) 33 108 999 / +66(0)38 921 821 / 1719 (Local call) http://www.bangkokrayong.com/en/home
Mongkut Rayong Hospital *(Primary Evacuation)*	149/1 Ma Ya Road, Amphoe Mueang Rayong Chan Wat Rayong 21000 Thailand	+66(0)38 6918 000 / +66(0)38 6821 36-9 / +66(0)86 3684505 http://www.mongkutrayong.com
Bangkok Hospital *(Secondary Evacuation Hospital)*	2 Soi Soonvijai 7, New Petchburi Road, Bangkok 10310, Thailand	Hospital Hotline Call: +662 310-3000, or 1719 (Local call) https://www.bangkokhospital.com/index.php/en
Bumrungrad International Hospital in Bangkok *(Secondary Evacuation Hospital)*	33 Soi Sukhumvit 3, Khwaeng Khlong Toei Nuea, Khet Watthana, Krung Thep Maha Nakhon 10110, Thailand	+66 (0) 2011 2222 / +66 (0) 2011 5222 https://www.bumrungrad.com
Thainakarin Hospital in Bangkok *(Secondary Evacuation Hospital)*	345 Bang Na-Trat Road, Khwaeng Bang Na, Khet Bang Na, Krung Thep Maha Nakhon 10260, Thailand	+66 (0) 2361 2727 / +66 (0) 2361 2828 https://www.thainakarin.co.th
Banchang Hospital *(Secondary Evacuation Hospital)*	77 Moo 1, Sukhumvit Rd, Plala Banchang District , Rayong 21130	+66(0)38 603 838 http://www.banchanghospital.net

PUBLIC EMERGENCY CONTACT NUMBERS

NAME	PHONE NUMBER
Ambulance and Rescue	1544
Fire	199
Police	191
Medical Emergency	1669
Tourist Police	1155

LOCAL COMMUNITIES CONTACT NUMBERS

ชุมชนในรัศมี 5 กิโลเมตร จำนวน 8 ชุมชน (8 Community in 5 k.m. from Construction Area)			
ลำดับที่	ชื่อ-สกุล (Name)	ชื่อชุมชน (Community Name)	หมายเลขโทรศัพท์ (Tel.)
[redacted]			
กลุ่มประมงเรือเล็ก(Fisherman Community total 10 group)			
ลำดับที่	ชื่อ-สกุล (Name)	ชื่อชุมชน (Community Name)	หมายเลขโทรศัพท์ (Tel. No.)
[redacted]			

APPENDIX 2 – ASSEMBLY POINTS FOR EVACUATION AT PROJECT

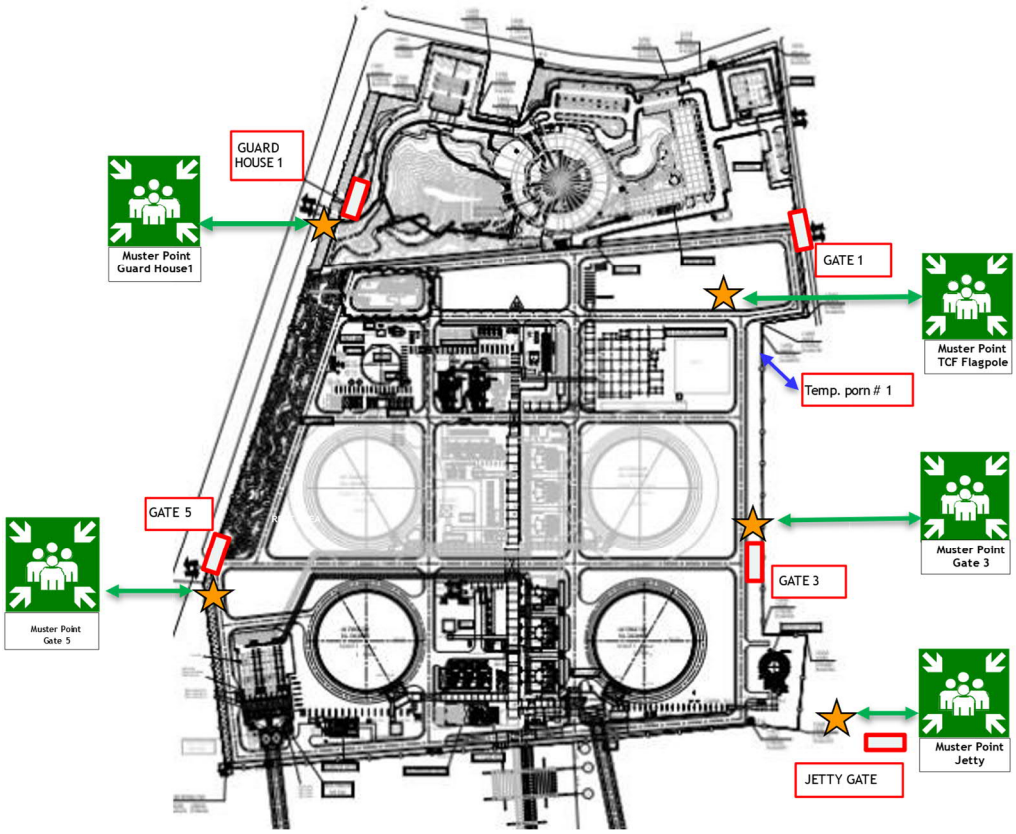

APPENDIX 3 – EMERGENCY MANAGEMENT FLOW CHART

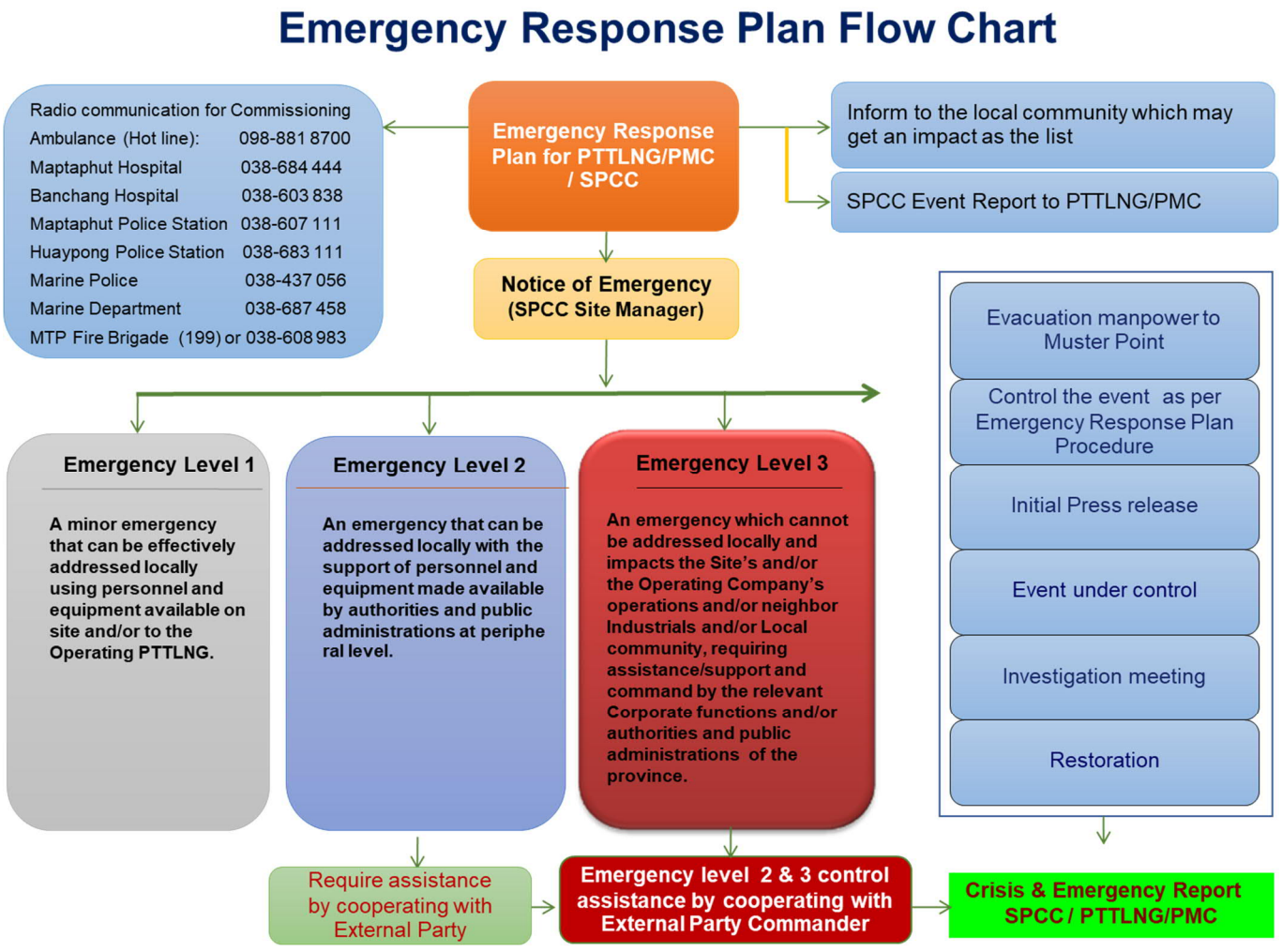

APPENDIX 4

Drill Date/ วันที่ซ้อมแผน		Time - Drill Start/ เวลาเริ่ม	
Location/ สถานที่		Time - Drill End/ เวลาสิ้นสุด	
Emergency Level and Type of Drill/ ระดับของเหตุฉุกเฉินและประเภทของการซ้อมแผน			□ Planned □ Unplanned

The Scenario
Equipment Utilized/อุปกรณ์ที่ใช้ *1.* *2.* *3.* *4.* 5.

Timetable :/ ช่วงเวลา	
Time	Action/ การปฏิบัติ

Assessment of Emergency Exercise Drill	
Positive / ข้อดี	Improvement / ข้อควรปรับปรุงแก้ไข
1. *2.* *3.* *4.* 5.	*1.* *2.* *3.* *4.* 5.

PHOTO OF DRILL

Report Prepared By	PHSEM

APPENDIX 5 – EMERGENCY CRISIS AND SCENARIOS

EMERGENCY & CRISIS SCENARIOS			
Working Condition Pre-Commissioning and Commissioning	*Scenario number*	*Scenario title*	
Foreseen Emergency level	Level 1	Level 2	Level 3	Crisis
Causes	☐ Collision (e.g. with helicopters, other vessels)	☐ Human error
	☐ Structural failure	☐ Piracy/Sabotage
	☐ Loss of position	☐ Country risks / Political or Social riots
	☐ Failure due to a wrong weight disposition	☐ IT system failure
	☐ Extreme and catastrophic weather (e.g. Tsunami, typhoons)	☐ Lack of compliance with local laws & regulations and Standards
	☐ Lack of propulsion	☐ Others Specify: ...
Potential Impacts	☐ Operational and Business Continuity of the Supply Chain	☐ Intangible Asset damage (e.g. reputation, relations with stakeholders)
	☐ Tangible Asset damage (with consequent economic/financial loss)	☐ Block of the operations (Economic Loss consequently)
	☐ Security	☐ Environmental Damage / Pollution
	☐ Personnel Health & Safety	☐ Others Specify: ...
Emergency Response Responsibility/Leadership	*TO FILL for the specific case ....* All the terms are agreed by the parts (eg, by means of Contract, Bridging Documents) Medevac procedure (Medevac = Medical Evacuation) is normally managed by the Client. When ... the Responsibility is normally up to Saipem.			
Response actions	Entities involved			
	☐ Coast Guards	☐ Hospitals
	☐ Police	☐ Local Authorities (eg Ministry, Environmental Agency and Marine department)
	☐ Fire Fighters	☐ Others Specify:
	Internal Communication			
	Refer to Communication Flow Diagram...			
	Emergency Preparedness			
	☐ Emergency Response Plan	☐ Crisis Team onboard
	☐ Satellite device (GPS)	☐ Vessels mapped and tracked by the Flag
	☐ SOPEP (Shipboard Oil Pollution Emergency Plans)	☐ Operational control and preventive measures in place
	☐ Vessel maps promptly available	☐ Voyage Plan
	☐ Weather Forecast service	☐ Others Specify: ...
Occurred events	*TO FILL for the specific case ...*			

PTTLNG Nong Fab LNG Receiving Terminal Project

Emergency Preparedness and Response Plan for Construction

Doc. Class Z

REV.	STATUS	DATE	REVISION DESCRIPTION	BY	CHK.	APPR.

This document is the property of SPCC who will safeguard its rights according to the civil and penal provisions of the Law.

Revision list:

Rev. Nr	Modifications:
R1	First Issue
F1	Issue for final and improvement from contractor on chapters: 3, 7,

TABLE OF CONTENTS

1 INTRODUCTION 3

2 DEFINITIONS AND ABBREVIATIONS 4

3 EMERGENCY CASES 6

4 REFERENCE DOCUMENTS 7

5 RESPONSIBILITIES 8

6 SITE EMERGENCY TEAM 11

7 ERP FOR CONSTRUCTION 12

8 EMERGENCY CONTACT NUMBERS 25

9 ASSEMBLY POINTS FOR THE SITE PREPARATION (AS REFERENCE) 33

10 EMERGENCY DRILL FORM 34

11 EMERGENCY DRILL PLAN 35

This document is the property of SPCC who will safeguard its rights according to the civil and penal provisions of the Law.

1 INTRODUCTION

The purpose of this document is to ensure that all foreseeable emergency situations arising during construction.

This Emergency Response Plan covers:

- Nomination of persons responsible for managing an emergency situation;
- Definition of roles/responsibilities of emergency response team;
- Procedures for reporting, communicating and response action in an emergency;
- Monitoring, testing and maintenance of alarm systems and early warning devices;
- Training requirement including drill exercises for emergencies;
- Rescues and medical treatment of casualties.

It is the responsibility of the CONTRACTOR Project Manager for Construction to ensure that all personnel, including visitors, are made fully aware of the contents of the emergency response procedures and receive information and induction training as necessary. The information and the training shall be documented.

This Emergency Response Plan describes the initial response actions, resource mobilization, training in emergency response and testing in respect of incidents which could occur during construction and it will be periodically updated based on the new information and needs of the phase.

This document is the property of SPCC who will safeguard its rights according to the civil and penal provisions of the Law.

1.1 SCOPE OF THE DOCUMENT

Scope of this document is to set up an emergency response and communications system that shall apply to any emergency occurring during the construction phase.

2 DEFINITIONS AND ABBREVIATIONS

2.1 SPECIFIC FOR THIS DOCUMENT:

Emergency	Event that causes a deviation from normal operating conditions, and such as to result in harm or potential harm to the health and safety of people, the environment and the Company's or third parties' assets. Emergency may result from human behaviours (terroristic attack, civil war, riots, demonstrations, etc.), malfunctions or failure of machine or plant, technical event (ignition, explosion, short circuit, etc.) or natural events (earthquake, hurricane, etc.).
1st level Emergency	A minor emergency that can be effectively addressed locally using personnel and equipment available on site and/or to the Operating Company. This includes, but is not limited to, the following: minor injuries to contractor or subcontractor personnel; damage to plant and/or equipment without significant harm to personnel, the environment, and/or public health; minor fire; manifestation
2nd level Emergency	An emergency that can be addressed locally with the support of personnel and equipment made available by authorities and public administrations at peripheral level. This includes, but is not limited to, the following: fire with intervention of the fire-brigade; medical evacuation (MEDEVAC); local demonstration.
3rd level Emergency	An emergency which cannot be addressed locally and impacts the Site's and/or the Operating Company's

This document is the property of SPCC who will safeguard its rights according to the civil and penal provisions of the Law.

	operations, requiring assistance/support from the relevant Corporate functions and/or authorities and public administrations at central level. This includes, but is not limited to, the following: serious social unrest that cause the repatriation; serious injuries to contractor or subcontractor personnel requiring MEDEVAC; contractor asset stoppage.
Crisis	A very serious event whose effects cause or may cause major impacts on the activities, health and safety of the employees and to the environment. A crisis is an emergency that cannot be addressed locally but requires the involvement of Saipem Crisis Management Team for the operational coordination of internal and external personnel and equipment available locally or provided by the relevant Corporate functions or by other group Companies. An event whose resolution can be extended over time.
Emergency Response Team	Group of qualified personnel responsible for managing emergencies (fire, medical or rescue)
Incident	An accidental event or chain of events that causes an emergency within the project context.
Medical Evacuation	Evacuation plan for medical emergencies.

2.2 ABBREVIATIONS

CM	Construction Manager
ECC	Emergency Control Center
EMM	Emergency Management Manager
ERP	Emergency Response Plan
ERT	Emergency Response Team
GS	General Service
IC	Incident Controller
MEDEVAC	Medical Evacuation
MERP	Medical Emergency Response Plan

This document is the property of SPCC who will safeguard its rights according to the civil and penal provisions of the Law.

PIP	Pre- Incident Plan
SM	Site Manager
SET	Site Emergency Team

3 EMERGENCY CASES

Emergencies, based on the nature of the triggering event, are classified in three main categories :

1. Operative: emergency due to carrying out of the site activities;
2. Natural: emergency due to event not related to the site activities and that cause and could cause harm to asset, health and safety of the personnel, environment or PTTLNG and CONTRACTOR reputation;
3. Security: emergency due to event not related to the site and that cause and could cause harm to asset, health and safety of the personnel, environment or CONTRACTOR reputation.

Events that may generate an emergency or crisis (Emergency Scenarios) are not all in the scope of the management of the present documents, however CONTRACTOR have identified such scenarios in as below reported:

- First aid
- Fire;
- Road accident;
- Man in the sea;

All the above events that may generate an emergency have to be considered in the following potential working conditions:
Project execution phase;
The identified scenarios may produce an emergency of different level.

The most probable foreseen Emergency level is highlighted in the table by suing the following classification and colors.

This document is the property of SPCC who will safeguard its rights according to the civil and penal provisions of the Law.

Level 1
Level 2
Level 3
Crisis

3.1 SPILL CONTINGENCY PLAN

A specific 'Spill Contingency Plan' which address the emergency response in case of environmental contamination has been developed. It details the response to spills of hazardous substances associated with project activities.

Details reported within the Spill Contingency Plan' 122018-SPCC-C-SH-PR-0025

3.2 MEDICAL EMERGENCY RESPONSE PLAN (MERP)

In the event of a serious accident, illness, or any other medical emergency during the PROJECT Operations, reference should be made to:

Medical Emergency Response Plan doc. n 122018-SPCC-C-SH-PR-0012

3.3 SECURITY EMERGENCY RESPONSE PLAN

In case of a Security Emergency, the Security Team will be alerted. Specific actions shall be contained in the Security Emergency Response Plan.

4 REFERENCE DOCUMENTS

PTTLNG, THAI and International References

- As reported within the Project SHE PLAN 122018-SPCC-C-SH-PR-0001

Specific for this Plan

- Project SHE PLAN 122018-SPCC-C-SH-PR-0001

This document is the property of SPCC who will safeguard its rights according to the civil and penal provisions of the Law.

5 RESPONSIBILITIES

5.1 SITE EMERGENCY TEAM (SET)

The Site ERP will be implemented via the CONTRACTOR Site Emergency Team (SET).

For the construction, pre-commissioning and commissioning activities, the SET will be composed by the following persons:

A. Emergency Management Manager (EMM): CONTRACTOR Site Manager or his delegate;

B. Emergency Response Team Coordinator (ERT Coordinator): CONTRACTOR SHE Manager or his deputy;

C. Incident Controller (IC): CONTRACTOR Construction Manager

D. Emergency Response Team : Fire brigade, Rescue Team and Medical Team.

5.2 EMERGENCY MANAGEMENT MANAGER (EMM)

The Emergency Management Manager shall be responsible for the overall direction of the emergency response strategy.

He shall:

- Manage every emergency scenarios along with ERT Coordinator;
- Maintain contact during emergency with ERT Coordinator in order to properly response in case of specific necessity;
- Establish the extent of the incident and the type of support required;
- Ensure proper line of communication with CONTRACTOR Management and PTTLNG representative (as per flowchart);
- Ensure that safe escape routes and assembly points are properly identified;
- Ensure that this document will be revised, when necessary.

The CONTRACTOR SM is the Emergency Management Manager and he shall appoint a competent person to carry out his duties and responsibilities in his absence.

5.3 EMERGENCY RESPONSE TEAM COORDINATOR

The SHEM at site is the Coordinator of the Emergency Response Team; he shall:

- Manage every emergency scenarios along with EMM;

This document is the property of SPCC who will safeguard its rights according to the civil and penal provisions of the Law.

- Coordinate, manage and promptly activate the ERT, providing information about the kind of emergency in order to obtain an adequate response by Team;
- Provide information and advice concerning the health and safety aspects of the response activities;
- Ensure that ERT is provided with all the equipment necessary to adequately response in case of every emergency;
- Ensure that ERT is composed only by competent and trained personnel;
- Ensure that all the employee involved in the activities are informed about the procedure to follow in case of emergency;
- Assign for each assembly point a dedicate safety officer;
- Ensure that this document will be revised, when necessary.

CONTRACTOR Deputy SHEM shall carry out above duties and responsibilities at site in the absence of the SHE Manager.

5.4 INCIDENT CONTROLLER (IC)

The Incident Controller, acting as logistics coordinator shall:

- Maintain continuous contact with EMM and ERT Coordinator during emergency;
- Arrange for the provision of additional equipment such as cranes, forklift, etc. to support activities of the ERT;
- Ensure the availability of emergency escape vehicles (buses) in appropriate number and at all times, for emergency evacuation.

  This position during the construction is covered by the Construction Manager in his absence he shall appoint a competent person to carry out his duties and responsibilities.

5.5 SAFETY HEALTH ENVIRONMENTAL OFFICER (SHE OFFICER)

The SHE Officer shall:

- Immediately inform ERT Coordinator about the emergency, specifying location and type of incident;
- Make an initial assessment of the severity of the incident;
- Maintain contact with the EMM and ERT Coordinator warn of potential for escalation of incident;
- On agreement with the EMM and ERT Coordinator, activate the Area Escape Alarm, thus ensuring that personnel escape to a safe assembly point away from the affected area;
- In the event of person missing, immediately inform EMM or ERT Coordinator in order to activate the search and rescue procedure.

This document is the property of SPCC who will safeguard its rights according to the civil and penal provisions of the Law.

5.6 EMERGENCY RESPONSE TEAM

Emergency Response Team shall be composed by competent and trained personnel and shall promptly respond when activated by ERT Coordinator. This team is composed depending on the kind of emergency by:

- Fire Brigade;
- Rescue Team;
- Medical Team.
- Security Team
- Support Team
- CSR Team
- Etc.

ERT shall check that emergency equipment are always in good condition, properly maintained and available in case of necessity.

ERT shall compose of a number of employee (SHE supervisor/officer) that during emergency shall guide workforce to dedicated Assembly Point.

ERT shall be available 24 hours per day, in order to properly response in case of emergency.

5.7 EMPLOYEE/WORKER

Each person who, once an emergency situation is detected, shall immediately inform the SO and/or supervisor of the area in order to start the emergency response process.

5.8 INTERFACE WITH SUBCONTRACTORS

CONTRACTOR and SUBCONTRACTORs will form an integrated Emergency Response Team (ERT).

The CONTRACTOR SM and SHEM are responsible for ensuring efficient communication with the key staff of the SUBCONTRACTORs.

All SUBCONTRACTORs will strictly apply this Emergency Response Plan and develop their own area specific Emergency response plan according to this and submit to the CONTARCTOR for the integration within the present document.

This document is the property of SPCC who will safeguard its rights according to the civil and penal provisions of the Law.

5.9 SUBCONTRACTORS RULES ON THE EMERGENCY RESPONSE ORGANIZATIONS

All SUBCONTRACTORs SHE Managers will be involved directly in the emergencies management as an integral part of the CONTRACTOR ERT.

SUBCONTRACTORs SHE Managers will interface themselves directly to the CONTRACTOR's Deputy SHEM and will inform their organization promptly to involve SUBCONTRACTORs Management, supervision and workers as soon as possible.

SUBCONTRACTORs shall issue its own emergency procedures to adhere completely to CONTRACTORs and PTTLNG requirements.

6 SITE EMERGENCY TEAM (SET)

6.1 ORGANISATION

Incident response on site will be implemented by the Site Emergency Team (SET).

The SET will comprise a group which will direct emergency response and which will implement on-the-ground emergency response activities.

Site Emergency Team shall establish the Dress Code i.e. Reflective Jackets.

Table no. A – Site Emergency Team (SET)

Emergency Role	Fulfilled one of the following:	Own by
Emergency Management Manager (EMM)	SM	CONTRACTOR
Incident Controller (IC)	Construction Manager (for the area)	CONTRACTOR
Emergency Response Team Coordinator	SHE / Deputy SHE Manager	CONTRACTOR
Emergency Response Team	Fire/Rescue/Medical Team	CONTRACTOR

The SET will gather in the designated Emergency Control Centre located in CONTRACTOR Site Office.

The office/trailer will be clearly indicated and equipped with the following items:

- Copy of Emergency Response Plan;
- Spare Radio with charger;
- Hot line to the Emergency Control Centre;

This document is the property of SPCC who will safeguard its rights according to the civil and penal provisions of the Law.

- A dedicated line to guarantee 24 hours connection with the PTTLNG;
- Maps and plant lay-out;
- Emergency lighting.

A copy of the ERP will also be distributed to:

- PTTLNG/PMC, in order to facilitate the coordination between the different emergency team;
- All the above responding personnel (SET) and entities;
- SUBCONTRACTOR personnel which will be integral part of the SET, whenever required.

6.2 DUTY AND CALL-OUT ROSTER

The EMM, or his delegate, shall ensure there is always a valid 24 hour Emergency Duty Roster identifying who fulfils the emergency roles and the automatic replacement if unavailable.

Dedicated Radio/emergency mobile phones shall be provided for each SET member.

6.3 MEANS OF COMMUNICATION

The primary means of communication for the SET, in case of emergency developed during construction, will be:

- ***Air horne***
- ***Radio (or walky-talky);***
- ***Mobile (only in authorized area);***

All personnel fulfilling a SET role shall have at all times a ***radio and/or mobile telephone*** with himself.

The Emergency alarm during the construction phase will be given by ***air horne, direct communication, megaphone or walky-talky***

7 ERP FOR CONSTRUCTION

Emergency situations occurring within project construction, areas will be managed according to the following sections, through the SET.

This document is the property of SPCC who will safeguard its rights according to the civil and penal provisions of the Law.

7.1 ALARM SYSTEMS

In case of emergency, the persons shall receive instructions from SET to proceed to the assembly points.

This will be done by radio (or walky-talky) or by alarm system. Alarm system has to be defined;

For **AIR HORNE use that is:**

- **3 short blast on air-horn (approx. 2 seconds each) will activate emergency situation FIRST AID; supervision will respond to the location, assess the situation and call appropriate emergency service.**
- **1 long blast on air-horn (approx. 5 seconds) will activate emergency situation EVACUATION;**

Upon receiving the instructions, all personnel shall proceed in an orderly manner to the nearest Assembly Point and await further instructions. Assign a designated person to proceed to the nearest access/egress gate to direct incoming emergency personnel services.

All other scenarios shall be prompt reported by using the radio / mobile phone system.

7.2 EMERGENCY RESPONSE PROCEDURE

In case of emergency, the person becoming aware of such emergency situation shall immediately inform the SHE Officer or his supervisor in the area.

SHE Officer /Supervisor shall immediately communicate with ERT Coordinator providing as clearly as possible:

- Exact location of the incident;
- Nature of the incident;
- Caller's name and location;
- other relevant information.
- Upon receiving notification by SHE Officer, ERT Coordinator shall inform the EMM in order to activate the SET.
- At this point, the ERT shall act in the area affected by emergency, based on the information received by the ERT Coordinator.
- At the activation of a local emergency alarm, the personnel shall:
- Stop all work at once;
- Shut down and make safe all equipment;
- Vacate the work place, following safety officer instructions proceeding in an orderly manner to the nearest assembly point and wait for further instructions;

This document is the property of SPCC who will safeguard its rights according to the civil and penal provisions of the Law.

- At the assembly point a roll call is taken and all the personnel are accounted, awaiting further instructions;
- Not return to work until a notification has been received from EMM by the ERT that it is safe to do so.

On being alerted to a **medical emergency**, the personnel shall respect as foreseen in the MERP, but basically must respect following instructions:

- Keep clear the zone affected by the emergency and remove any vehicles that could cause restriction to the emergency response team (follow the instruction of the SET) or of the ambulance services;
- Not disturb the accident scene;
- Not block the emergency operations;
- Return to work if safe to do so.

During any emergency situation, security personnel shall prevent any person or vehicle not authorized from entering in the incident area. Only authorized Emergency Service, SHE Staff and Project Staff will be allowed into the site incident area.

In the event of person missing:

- SET shall consider likely areas of the site to be searched;
- Provided it is safe to do so, the ERT will organize a systematic search of the area to recover missing persons, starting in the high risk areas;
- As soon as each area is found to be free of casualties, this information shall be transmitted to the EMM;
- Should gas be detected, a Rescue Team with breathing apparatus shall be activated to conduct the activities.

7.3 FIRE

All the personnel shall be instructed on location of fire extinguishers, evacuation routes, and muster points and alarm systems and how to alert them. ERT shall ensure that appropriate extinguishers for the potential types of fires are available.

In the event that a fire should occur, employees shall follow the following procedures, unless directed by the Fire Fighter of the ERT:

a. Inform your surrounding colleagues of the fire (i.e. Shout, “Fire”, “Fire”, “Fire”);

b. Look for a ERT member in the area;

This document is the property of SPCC who will safeguard its rights according to the civil and penal provisions of the Law.

c. If no ERT member intervened, try to fight a fire only if have been trained and you deem that it is possible;

d. Find appropriate Fire Extinguisher refer to table below on type of Fire Extinguisher and use it as below direction:

Most fire extinguishers operate using the following P.A.S.S. technique:

1. PULL – Pull the pin. This will also break the tamper seal.

2. AIM – Aim low, pointing the extinguisher nozzle (or its horn or hose) at the base of the fire.

3. SQUEEZE – Squeeze the handle to release the extinguishing agent.

4. SWEEP – Sweep from side to side at the base of the fire until it appears to be out. Watch the area. If the fire re-ignites, repeat steps 2 - 4.

If you have the slightest doubt about your ability to fight a fire... CALL EMERGENCY NUMBER! (refer to section 8.1 reporting of emergency situation)

CLASS	FUEL	USE	DO NOT USE
A	Combustible Materials	Water, Powder	
B	Flammable Liquid and Gasses	Foam, Powder, CO_2	Water (except for cooling and protection)
C	Energized Electrical Components	Powder, CO_2	Water (except for cooling and protection)
D	Metal	Special Powder, Sand	Any other extinguisher

e. Promptly evacuate the area and activate the alarm. Shut off equipment, any involved electric circuit and close down fuel sources, only if it can be done without risk.

f. When the fire alarm is started, all employees are required to proceed quickly, and orderly to the nearest muster point and alert others to do the same. They shall follow the evacuation procedures and the directions from ERT members.

g. Smoke is the greatest danger in a fire, so while evacuating from an area filled with smoke, use a wet handkerchief to protect mouth and nose.

h. Special attention shall be paid to ensure that persons with mobility, vision, or hearing disabilities are safely evacuated to a safe distance from the immediate emergency.

i. Employees shall not return to the evacuated area unless directed to do so by ERT Team. After any evacuation, employees shall report to muster point. They shall stay there until an accurate headcount is taken. Firefighting team personnel with the assistance of the fire watcher will conduct a roll call for all the workers. They must immediately notify the ERT Coordinator of any missing persons, if known.

This document is the property of SPCC who will safeguard its rights according to the civil and penal provisions of the Law.

7.4 DISASTER RESPONSE SUCH AS STRONG WIND, THUNDERSTORM, HEAVY RAINFALL, FLOODING, EARTHQUAKE, AND TSUNAMI

The risk of incidents involving disaster response such as strong winds, thunderstorm, heavy rainfall, flooding, earthquake and tsunami shall be reduced through proper works planning and weather forecast monitoring.

Watches are issued by relevant Meteorology and Geophysical Organizations to indicate when and where severe thunderstorms and/or tornadoes are most likely to occur. A severe thunderstorm watch implies that storms may develop to sufficient strengths to produce large losses. Information concerning severe weather that may require immediate action is analysed by Construction and followed up by SHE departments which shall access this information by continuously monitoring weather broadcasts.

Alarm shall be sounded when a severe weather watch or warning is announced. However, the clear instruction will be explained below when facing this situation;

A. Strong Wind

For the particular Site Location no strong winds are expected. The monthly wind average velocity ranges from 4 to 7 knots dominantly to the north, south, and south west. These values, classified in the Beaufort scale of winds with the scale number 1-3 (Light Winds) can not cause any disruption to activities or people involved.

The following precautions shall be observed in case of occasional strong winds:

In case of wind speeds over 47 km/h (25 knots, 13 m/s, measuring Beaufort 6, “Strong Winds”) measured at 20 m above sea level, the activities on elevation shall be stopped and only particular urgent operations shall be expressly authorized (e.g. securing temporary works).

Particular care shall be paid to working on elevation, where the wind speed is higher than the ground level, and in particular when walking on scaffolding, avoiding, on the same, the transport of materials, equipment and other objects which could fall on the area below.

Taking care of the housekeeping and the materials fastening on work places.

Lifting of plates and/or handworks with a high (surface/ weight) ratio as well as the lifting of people and/or materials inside of baskets, shall be carefully evaluated by the person in charge for the works, with regard to the wind speed, so as to prevent particular oscillations and lifted loads unstableness.

Insufficient protection from the wind action, during welding, cutting or scarfing can cause the spreading of smelting drops, with consequent risks due to the people contact and the fire triggers. In these conditions it should considered that also a small smelting drop which nestles in the planks interstices can be the cause of a fire.

This document is the property of SPCC who will safeguard its rights according to the civil and penal provisions of the Law.

B. Thunderstorm

In case of imminent thunderstorm or severe weather emergency occurred, a sound alarm will warn about the necessity of leaving the work places in outdoor areas.

It should be kept in mind that, in similar situations, lightning is the most dangerous phenomenon for human life.

The main prevention rules to be carried out before or during a thunderstorm are:

- Do not stay by or take cover below metal masses (yard outdoor frameworks, piping, scaffolds, etc.) specially being on the ground;
- Do not stay by cranes, excavators, heavy vehicles or equipment, poles and tower lights, wire ropes, fences;
- Do not stay by earth or power traps;
- Do not stay under trees;
- Do not stay by electric boxes or containers with electrical connected equipment;
- Inside of the workshops do not stay or touch metallic framework (pillars, steel external walls);
- Do not stay or shelter under beach umbrellas or other frameworks with pointed parts;
- Suspend the electrical maintenance activities on facilities (e.g. electrical cabins) and/ or power system connected machines;
- Use the phone only in necessity case, take the headphones off;
- If riding, get off and go away from the bike.

It is reminded that the danger exists even if the lightning strikes close by a person: the current of lightening does not directly “come into” the ground, as commonly one thinks, but it distributes on a surface losing its intensity as the person goes away from the fall point.

If a person goes away from the fall point walking at strides, the electric potential difference between the ground under a foot and the other can be dangerous determining involuntary muscles contractions, respiratory or cardiac arrest.

If the lightning strikes close to a person, therefore, it is recommended to go slowly off and, mostly, to take short steps.

If into a car or into a mean cabin, the risks are the least, but it is necessary to remember of:

- Closing windows and doors or hatches;
- Not to touch metal parts or the car radio;
- In case of the car is not made of metal, on no account, it is not to be considered safe.

This document is the property of SPCC who will safeguard its rights according to the civil and penal provisions of the Law.

In case a worker was observed being struck by a lightening, he would not result electrically charged and so touching him would not be dangerous. Anyone in the vicinity shall intervene promptly for the first-aid, if trained and qualified to do so, otherwise emergency help shall be sought.

All activities must cease during thunderstorms and personnel must remove themselves to the designated muster point.

ERT Coordinator to assign the ERT member to:

- Warn workers in his respective areas;
- Report the number of workers in the muster point;
- Report any persons injured or property damage to CONTRACTOR ERT Coordinator;
- ERT members will advise individuals in their area to:
- Remain calm. Do not run, panic, or cause others to panic;
- Quickly gather in small groups of 3-4 people and use the "buddy system" while moving to the nearest shelter.

All workers will remain at the recommended place until the "ALL CLEAR" is given by CONTRACTOR ERT Coordinator.

All radio users shall be instructed by SHE personnel to keep channels clear for emergency communications.

SHE and Construction personnel will continue to monitor the local weather conditions under direction of CONTRACTOR ERT Coordinator, and shall announce the "ALL CLEAR" status to all workers, when the Severe Weather WARNING is cancelled. Updates will be provided to workers, when possible, as to the status of the severe weather warning.

Protocol for lighting

When the flash/bang count is at 15 seconds, supervision will suspend all crane work and elevated work activities.

When the flash/bang count is at 9 second or less, all activities will be suspended and the site will be cleared. All employees will report to sheltered place at site (buildings, trailers etc.), where a head count will be done as per the evacuation protocols and the proper notification will be made.

All work will remain suspended until the decision to return to work is reached by the CONTRACTORS's Construction manager together with the SUBCONTRACTORS representatives at site.

This document is the property of SPCC who will safeguard its rights according to the civil and penal provisions of the Law.

C. Heavy Rainfall and Flooding

All efforts will be made to prevent flooding during the heavy rainfall.

The following action should be made to prevent the flooding; but not limited to:

- Make sure that roof's gutters at each building/workshop and downspouts are in good condition
- Periodic maintenance of the drainage system
- Periodically inspection on all the sewage pits

D. Earthquake and Tsunami

During an earthquake, employees shall remain calm and follow the steps below:

- IF INDOOR, employees shall seek refuge in a doorway, under a desk or table. Stay away from glass windows, shelves, and heavy equipment;
- IF OUTDOORS, employees shall move quickly away from buildings, utility poles, and other structures. Always avoid power or utility lines as they may be energized;
- IF IN A VEHICLE, they shall stop in the safest place available, preferably away from power lines and trees. Stop as quickly as safety permits;
- After the initial shock, evaluate the situation and wait for instructions from ERT;
- Employees shall protect their selves at all times & be prepared for aftershocks and tsunami;
- If hazards resulting from the earthquake should occur such as fires, hazardous material spills, and/ or power black-outs, employees shall contact SHE personnel and follow the Emergency Response established in this plan;
- All employees should be made aware on the suggested evacuation routes to the muster points, where assistance can be provided and the headcount is performed till the "all clear" is given;
- Employees shall be alerted for a massive tidal wave or Tsunami. If there is any sign of Tsunami, ERT members shall instruct workers to evacuate to the higher ground or inland, preferably by foot, especially after there has been a strong earthquake, causing damages to roads;
- If on a boat, when a tsunami is coming, it is suggested to leave the shore area/ harbour for the open water, where tsunami effects are minimal.
-

This document is the property of SPCC who will safeguard its rights according to the civil and penal provisions of the Law.

7.4.1.1 Machinery or Equipment Failure

In the event of the machinery failures immediately call the and report to Site Supervisor. Assess the situation and immediately shutdown the machinery. Consider consequences:

- Potential spillage
- Potential fire occur

Liaise with the SITE management team in order to assess the potential property damage.

7.4.1.2 Vessel/Barge Collision/ Mooring Failure

In the event that collision occurs between the Vessel with other vessels or mooring failure during berthing at Construction Site location the emergency call to ERT Coordinator shall be done immediately liaise with Marine Work Team to assess the situation; the SUBCONTRACTOR in charge for the operation shall ensure the below assessment completed and full capability in the response:

- Extent of damage caused – on both affected facilities;
- Likelihood of continuing failure of both facilities induced by the collision;
- Necessity for Partial/Total evacuation of the barge;
- Activate the Evacuation Procedure;

When reporting such incident/ accident refer to Incident Investigation and Reporting (Doc. No. 122018-SPCC-C-SH-PR-0014), the following information is required:

- Size or weight of colliding facility/ vessel;
- Name and Port of Registry of the Vessels;
- Locations related to the facilities;
- Whether it is completely or partially “disabled”;
- Present weather conditions i.e. wind, roll, current, tide, etc.;
- Weather focuses and reports;
- Other vessels available in the vicinity of the incident/ accident

7.4.1.3 Transportation Incident

In case of transportation accident the following prompts apply:

- Coordinate evacuation of the Injured Person (IP) to the safe area;

This document is the property of SPCC who will safeguard its rights according to the civil and penal provisions of the Law.

- Call an emergency number;
- Determine level of escalation requirements;
- Coordinate first aid treatment, if trained to do so, until arrival of the ambulance/medical assistance;

Request further resources as may be required;

- Advice the Police as required under the Thailand Road Traffic Regulations, if the incident happened outside of the boundaries of the construction site;
- Ensure adjacent equipment/ plant is moved to a safe area (subject to incident non-disturbance requirements);
- Remain at the location until all injured personnel have been treated/ evacuated and the site has been made safe;
- Advise appropriate person of incident status, number of casualties, or extent of property damage and CONTRACTOR SHE Department – SECURITY Coordinator and HR Manager in order to initiate incident reporting.

7.4.2 SECURITY

7.4.2.1 Security Coordinator

The Security Coordinator is responsible for the supervision and control of security personnel and their performance during an emergency situation. The Security Coordinator shall ensure the instructions he provides to Security Officers (as well as the Security Officers' conduct) comply with the terms of the contract and Company expectations.

7.4.2.2 Security Personnel

The Security Personnel shall be responsible for:

- Registering the Visitor and giving them the Visitor Badge;
- Bringing the visitor log book to be used to re-check the visitors in the muster point;
- Acting as Fire Watcher on their respective areas;
- Ensuring the exit door from office area is available to pass without any obstruction;

Directing the employees/ visitors to the nearest emergency exits and muster point, preventing running or lagging behind and ensuring traffic roles are observed.

This document is the property of SPCC who will safeguard its rights according to the civil and penal provisions of the Law.

7.4.3 Evacuation

Evacuation of the entire project areas is unlikely to be required but in case will be required all personnel have to stop all activities, clear the area and immediately proceed to the designated site assembly points.

7.4.4 Head Count

- The supervisor/foreman of each working team is responsible for the headcount of its working partners.
- SHE officers are responsible for collecting/accumulating total headcount and have to make sure that all personnel are present with compare of Register File ID access system.
- Rescue operation will start to find out missing personnel, if any.

7.4.5 Emergency Equipment Checklist

During Construction phase following equipment shall be inspected on weekly basis.

Emergency Equipment Checklist for		
Guard Light	Flashlight & Extra batteries	Emergency Contact Sheet
Hard hats/ear protection;	Pocket knife	Evacuation Plan
Leg protectors, approved safety footwear;	First Aid Kit	Local Maps
Goggles/safety glasses with side shields;	Dust Masks	Stretcher and blankets;
Whistle	Fire Extinguisher	Ambulance; emergency vehicle; emergency rescue boat.
Walkie-talkie	Wrench/Saw	Gloves

7.5 TRAINING

The principles and most important information about Emergency Response Plan shall be gathered in:

- CONTRACTOR SHE Induction;
- Regular meetings to explain and understand the emergency procedures;
- Pre-job Safety Meeting and Tool Box Talk.

All SET member shall participate to specific training which advice and inform them about their duty and responsibilities in case of emergency.

This document is the property of SPCC who will safeguard its rights according to the civil and penal provisions of the Law.

Dedicated training has be done for ERT members.

Training sessions for CONTRACTOR personnel shall be documented by the DEPUTY SHEM.

SUBCONTRACTORs SHE Manager shall ensure training sessions for their personnel to familiarize them with the Emergency Response Plan.

7.6 EMERGENCY DRILLS

- SHEM at site shall prepare a dedicated plan to test and simulate on monthly basis, the response in case of emergency.
- ERT Coordinator shall supervise the Emergency Drills and shall prepare a report to summarize the findings and evaluate possible actions to improve the method/operations. The report shall be shared with CONTRACTOR organization.
- The schedule shall consider new workers and SUBCONTRACTOR arrival on the project in order to include them in the drills.
- Emergency Drills shall include all the foreseen scenarios.(For Emergency Drills form refer to section 10)
- Emergency drills shall cover all foreseen scenarios as identified in sect 12.

7.7 MEDICAL FIRST AID FACILITIES

Inside medical facility (first aid room/clinic) all the equipment shall be periodically checked at least on monthly base by the Nurse/Medical staff in accordance with the number of employees and the relevant medical needs.

After using the First Aid Kit, the Medical staff shall ensure that First Aid Kit is re-furnished and available.

Urgent cases will be evacuated to the Hospital at given numbers in section 8.2 .

7.8 PROCEDURE UPDATE/ REVISING

Document will be updated when:

- In case of a change of the legislation/ regulation or revision from authority.
- In case of management of change.
- After completion of the emergency drill or after the occurrence of emergency situations (if necessary)
- Assessment and reviewing to be taken in Annual basis whether they are still relevant with the PROJECT needs.

This document is the property of SPCC who will safeguard its rights according to the civil and penal provisions of the Law.

7.9 EMERGENCY MANAGEMENT FLOWCHART

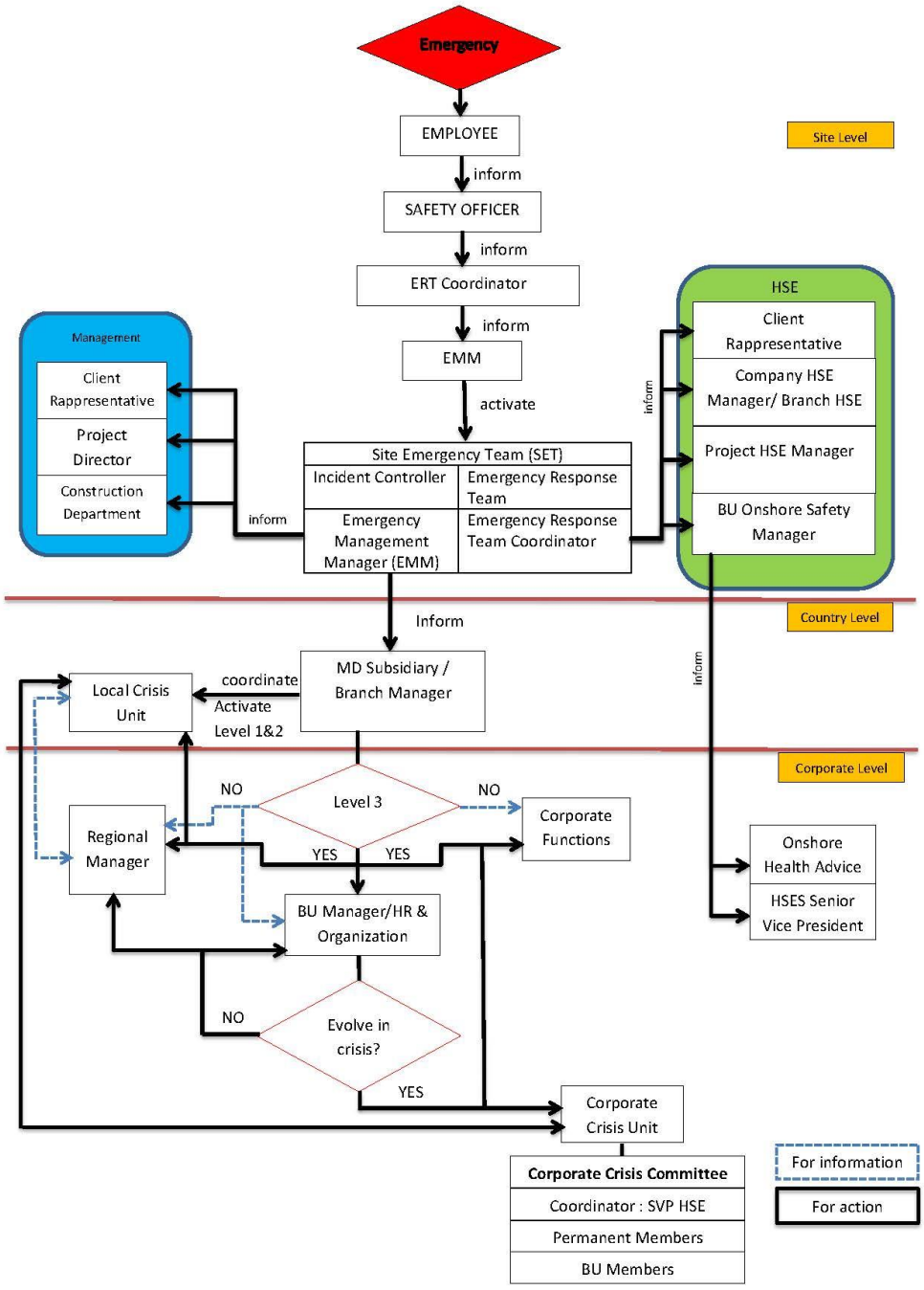

This document is the property of SPCC who will safeguard its rights according to the civil and penal provisions of the Law.

8 SITE EMERGENCY CONTACT NUMBERS

8.1 SITE EMERGENCY CALL (FOR REFERENCE) AT SITE THIS PART SHALL BE UPDATED BASED ON THE NEEDS

SITE EMERGENCY CALL

SPCC Site Emergency Contact

Name	Position	Mobile Phone
[redacted]		

SUBCONTRACTOR On Site Representative/Contact Point

Name	Position	Mobile Phone
[redacted]		

SITE EMERGENCY RESPONSE TEAM(S) (ERT) SPCC and SUBCONTRACTORS

NAME	POSITIONED (WORK PLACE/OFFICE)	CONTACT NUMBER
[redacted]		

This document is the property of SPCC who will safeguard its rights according to the civil and penal provisions of the Law.

8.2 EMERGENCY CONTACT DIRECTORY

IN AN EMERGENCY SITUATION THE UNDER LISTED CONTACT NUMBERS CAN BE REACHED TO ACTIVATE EMERGENCY RESPONSE ACCORDING TO THE EMERGENCY MANAGEMENT FLOWCHART (7.9)

HOME OFFICE FUNCTIONS						
N°	**POSITION**	**NAME**	**MOBILE**	**EMAIL**	**WHF RADIO CHANNEL**	**ROLE INTO THE EMERGENCY**
1	CONSTRUCTION DEPARTMENT	[redacted]			NA	NOTIFIED BY SITE MANAGER (EMM)
2	BU ONSHORE SAFETY MANAGER				NA	NOTIFIED BY SHE MANAGER
3	MANAGING DIRECTOR				NA	NOTIFIED BY EMM, ACTIVATE THE LCU
4	PROJECT DIRECTOR				NA	NOTIFIED BY SITE MANAGER (EMM)
5	DEPUTY PROJECT DIRECTOR				NA	NOTIFIED ON BEHALF OF PD BY SITE MANAGER (EMM)
6	SHE MANAGER				NA	NOTIFIED BY SITE SHE MANAGER (ERT COORDINATOR)
SITE EMERGENCY TEAM - SET						
N°	**POSITION**	**NAME**	**MOBILE**	**EMAIL**	**WHF RADIO CHANNEL**	**ROLE INTO THE SITE EMERGENCY**
1	SITE MANAGER	[redacted]			TBD	EMERGENCY MANAGEMENT MANAGER (EMM) INFORM MANAGING DIRECTOR
2	CONSTRUCTION MANAGER OF BOP				TBD	AREA INCIDENT CONTROLLER (BOP-IC)
3	CONSTRUCTION MANAGER MARINE WORKS				TBD	AREA INCIDENT CONTROLLER (MW-IC)
4	CONSTRUCTION MANAGER …				TBD	AREA INCIDENT CONTROLLER (….)
5	DSHE MANAGER				TBD	ERT COORDINATOR
6	SHE COORDINATOR				TBD	DEPUTY ERT COORDINATOR
7	HEALTH				TBD	ERT HEALTH

This document is the property of SPCC who will safeguard its rights according to the civil and penal provisions of the Law.

	COORDINATOR	[redacted]				LEADER
8	SECURITY COORDINATOR				TBD	ERT SECURITY LEADER AND SUPPORT EMM FOR THE COMMUNICATION WITH THE LOCAL AUTHORITIES
9	INTERFACE CSR MANAGER					SUPPORT EMM FOR THE COMMUNICATION WITH THE LOCAL AUTHORITIES
10	SHE AREA OFFICER MARINE WORKS					INFORM ERT COORDINATOR
11	SHE AREA OFFICER BOP					INFORM ERT COORDINATOR
12	SHE AREA OFFICER TANK					
13	ENVIRONMENTAL SPECIALIST					ERT ENVIRONMENTAL LEADER (ENV INCIDENT / EMERGENCY)
14	SITE NURSE					SUPPORTING ERT HEALTH LEADER AND ACTING AS DEPUTY

SUBCONTRACTOR SITE EMERGENCY TEAM - SET BOP

N°	POSITION	NAME	MOBILE	EMAIL	WHF RADIO CHANNEL	ROLE INTO THE SITE EMERGENCY
	PROJECT MANAGER					EMERGENCY MANAGEMENT MANAGER (EMM)
	CONSTRUCTION MANAGER					INCIDENT CONTROLLER (IC)
	SHE MANAGER					EMERGENCY RESPONSE TEAM COORDINATOR
						EMERGENCY RESPONSE TEAM MEMBER

This document is the property of SPCC who will safeguard its rights according to the civil and penal provisions of the Law.

SUBCONTRACTOR SITE EMERGENCY TEAM - SET MARINE WORKS						
N°	**POSITION**	**NAME**	**MOBILE**	**EMAIL**	**WHF RADIO CHANNEL**	**ROLE INTO THE SITE EMERGENCY**
	PROJECT MANAGER					EMERGENCY MANAGEMENT MANAGER (EMM)
	CONSTRUCTION MANAGER					INCIDENT CONTROLLER (IC)
	SHE MANAGER					EMERGENCY RESPONSE TEAM COORDINATOR
						EMERGENCY RESPONSE TEAM MEMBER

INTEGRATED TEAM CONTRACTOR AND SUBCONTRACTORS – FIRST AIDERS AND FIREFIGHTERS						
N°	**POSITION**	**NAME**	**MOBILE**	**EMAIL**	**WHF RADIO CHANNEL**	**ROLE INTO THE SITE EMERGENCY**

This document is the property of SPCC who will safeguard its rights according to the civil and penal provisions of the Law.

8.3 SITE PTTLNG/PMC REPRESENTATIVE NOTIFICATION NUMBER

PTTLNG and TGES Site Representative to be notify

Name	Position	Mobile Phone
[redacted]		

8.4 EXTERNAL/ PUBLIC SITE EMERGENCY CONTACT NUMBERS

Hospital Table.

Item	Hospital Name	Telephone
1	Rayong Hospital	038 611104
*2	Princess Sirinthorn Maptaphut Hospital http://www.maptaphuthospital.com	038 684444
*3	Banchang Hospital	038 603995
4	Nikompattana Hospital	038 038050-1
*5	Bangkok Rayong Hospital	038 921999
6	Ruamphat Rayong Hospital	038 860890-3
*7	The Mongkut Rayong Hospital	038 691800
11	Queen Sirikit Hospital	038 245700
*12	PTT GC Emergency Control Center http://www.npc-se.co.th	038 977700

Note 1. In **Rayong** for severe cases the hospital to go are *3 Banchang Hospital;

*5 Bangkok Rayong Hospital for No Thai speaking emergencies to reach Bangkok Hospital Rayong (call 1719 international call centre).

This document is the property of SPCC who will safeguard its rights according to the civil and penal provisions of the Law.

Note 2. *7 CTCI personnel - The Mongkut Rayong Hospital

Note 3. *2 This Hospital is the closest (6.5km/ 9 min.) to SITE, but Thai language only and open 24/7, Number to call (in Thailand) is ***1669***; public ambulance arrives within 4 minutes.

Note 4. *12 This clinic centre is just 700 meters away from SITE and with ambulances on standby.

Nurse Emergency Alert Centre Rayong **1669**

This document is the property of SPCC who will safeguard its rights according to the civil and penal provisions of the Law.

8.6 POLICE OFFICES NUMBERS

POLICE

Name	Place	Mobile Phone
Police Center	All areas	191
Rayong Provincial Police Station	Rayong	038 611 111, 038 613 676
Map Ta Phut Police Station	Map Ta Phut	| 038607 111
Banmang Police Station	Banchang	038 601 111
Nikhom Pattana Police Station	Nikhom Pattana	0 3863 6111
Huay Pong Police Station	Huay Pong	038 683 100

8.7 FIRE DEPARTMENT NUMBERS

Fire Department

Name	Place	Mobile Phone
Firefighters Center	All areas	199
Rayong Fire Department	Rayong	038 611 145
Map Ta Phut Fire Department	Map Ta Phut	038 675 562 , 038 636 438
Banchang Fire Department	Banchang	038 695 271
Rescue, Sawangporn Charity, Rayong	Rayong	038 611 092
Rescue ,Siam Deemsha (Pu Inin), Rayong	Rayong	038 636 859

This document is the property of SPCC who will safeguard its rights according to the civil and penal provisions of the Law.

This document is the property of SPCC who will safeguard its rights according to the civil and penal provisions of the Law.

9 ASSEMBLY POINTS FOR THE SITE PREPARATION (as reference)

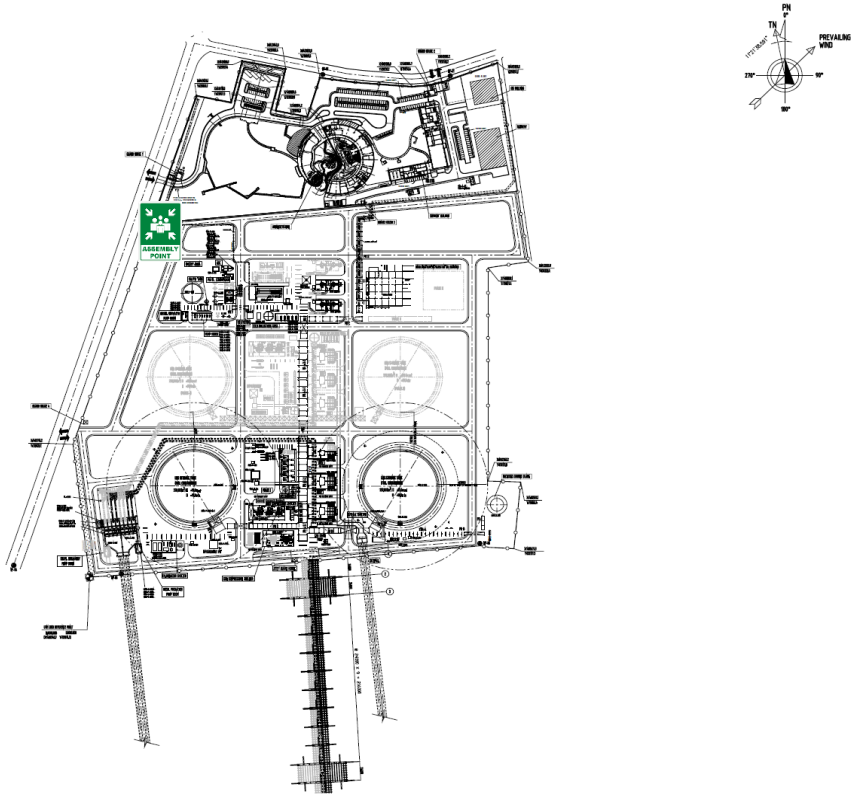

ASSEMBLY POINT CLOSE TO THE GATE 2

This document is the property of SPCC who will safeguard its rights according to the civil and penal provisions of the Law.

10 EMERGENCY DRILL FORM

EMERGENCY DRILL FORM			DATE	
			REVISION	
DRILL DATE		TIME		
TYPE OF DRILL (mark x in the corresponding column)				
	Announced		Unannounced	
	Fire		Medical	
	Oil/Chemical Spill		Confined Space Rescue	
	Civil Unrest		Multiple Casualties	
	Rescue		Other (Specify)	
DRILL INITIATED BY				
	NAME	POSITION	SIGNATURE	
PERSON IN CHARGE				
	NAME	POSITION	SIGNATURE	
DRILL SCENARIO (Description of Drill Process and activities simulated)				
SCENARIO: SCOPE: OBJECTIVES: EMERGENCY RESPONSE TEAM: OBSERVERS:				
DRILL TIMINGS:				
POSITIVE ITEMS:				
NEGATIVE ITEMS AND CORRECTIVE ACTIONS:				
	OBSERVATION	CORRECTIVE ACTION	RESPONSIBLE PERSON	DUE DATE

This document is the property of SPCC who will safeguard its rights according to the civil and penal provisions of the Law.

11 EMERGENCY DRILL PLAN 2018

		EMERGENCY DRILL 2018																		
DRILL TYPE						Oct.					Nov.					Dec.				
No.	DESCRIPTION	PARTICIPANT	EMERGENCY LEVEL		38	39	40	41	42	43	44	45	46	47	48	49	50	51	52
1	Fire	DEDICATED TEAMS in the area	1														X		
2	FIRST AID / MEDEVAC	DEDICATED TEAMS	1						X									X	
3	Severe Weather	BOP	1										X						

12 EMERGENCY AND CRISIS SCENARIO

BU-ON Emergency scenarios

This document is the property of SPCC who will safeguard its rights according to the civil and penal provisions of the Law.

This document is the property of SPCC who will safeguard its rights according to the civil and penal provisions of the Law.